Dear Motor Home Owners,

We would like to congratulate you on the purchase of your new HOBBY motor home and hope that you will always enjoy traveling with it.

Please read this manual carefully, even if you have been driving a motor home for a longer period of time. It will help you to avoid operating errors and damage to the vehicle and its equipment. Correct handling of all technical details will increase your driving comfort and maintain the value of your motor home.

We wish you and your companions many enjoyable trips and hope you always have a safe journey.

Your
HOBBY Motor Home Plant
Ing. Harald Striewski GmbH

Chapter 1: Introduction
1.1 General information ... 01-1
1.2 Before taking your first drive ... 01-1
1.3 Designations in the operating instructions ... 01-2

Chapter 2: Safety
2.1 General information ... 02-1
2.2 Fire protection ... 02-1
2.3 Road safety ... 02-2
2.4 What to observe before taking your first drive ... 02-2
2.5 Before and while driving ... 02-3
2.6 Notes for your journey ... 02-5
2.7 Tools on board ... 02-9
2.8 Emergency equipment ... 02-9
2.9 Maximum speeds ... 02-11
2.10 When you stop driving ... 02-14

Chapter 3: Chassis
3.1 Chassis ... 03-1
3.2 Loading ... 03-1
3.3 Leveling supports ... 03-7
3.4 Entrance steps ... 03-8
3.5 Externally mounted constructions ... 03-9

Chapter: Wheels, Tyres, Brakes
4.1 Wheels ... 04-1
4.2 Tyres ... 04-1
4.3 Inflation pressure ... 04-2
4.4 Tread depth ... 04-2
4.5 Wheel rims ... 04-3
4.6 Snow chains ... 04-3
4.7 Spare tyre ... 04-3
4.8 Tyre repair kit ... 04-4
4.9 Changing the tyre ... 04-7
4.10 Brakes ... 04-7

Chapter 5: Exterior Structure
5.1 Overview of tank and service flaps ... 05-1
5.2 Ventilation ... 05-3
5.3 Opening and closing doors and flaps ... 05-5
5.4 Exterior mirror ... 05-9
5.5 Condensation in headlight systems ... 05-9

Chapter 6: Electrical Installations
6.1 Safety instructions ... 06-1
6.2 HOBBY on-board control panel ... 06-1
6.3 Electric power supply ... 06-6
6.4 Function of the power generating unit ... 06-7

6.5 Caravan battery 06-10
6.6 Fuse protection of the electric system 06-11
6.7 Interior circuit diagrams 06-13
6.8 Subsequently installed devices 06-29

Chapter 7: Interior of the Caravan
7.1 Opening and closing doors and flaps 07-1
7.2 Windows 07-2
7.3 Caravan skylight 07-4
7.4 Remi-Star sunroof and blind 07-5
7.5 Dimming system for driver's cabin 07-10
7.6 Seating chests and setting up beds 07-11
7.7 Overview of seating arrangements 07-13
7.8 Overview of day and night positions 07-14
7.9 Seats in the caravan 07-21
7.10 Seatbelts in the caravan 07-21
7.11 Seats in the driver's cabin 07-22
7.12 Media unit 07-22
7.13 Bunk beds/alcoves 07-23

Chapter 8: Water
8.1 Water supply 08-1
8.2 Flushing toilet 08-4
8.3 Hot water supply 08-9

Chapter 9: Gas
9.1 General safety rules for using LPG fittings 09-1
9.2 Gas supply 09-3
9.3 Heating 09-5
9.4 Refrigerator 09-7
9.5 Gas cooker 09-7

Chapter 10: Accessories
10.1 Towbar coupling 10-1

Chapter 11: Maintenance and Care
11.1 Maintenance 11-1
11.2 Airing 11-1
11.3 Care 11-2
11.4 Operating in winter 11-4

Chapter 12: Sanitation and Environmental Protection
12.1 Traveling in the environment 12-1
12.2 Returning the vehicle 12-3

Chapter 13: Technical Data 13-1
13.1 Weights acc. to 92/21/EWG, 2007 season 13-1
13.2 Inflation pressure of tyres 13-2
Index I-1
Appendix A-1

Chapter 1: Introduction

Our motor homes are continuously being further developed and for this reason we must reserve the right to make changes to the equipment, shape and technology. Certain kinds of accessories are also described in this user manual that are not part of the standard scope of delivery. For this reason, no claims may be asserted against HOBBY based on the contents of this user manual. Those accessories that are available at the time of going to print are described here. They have been applied on a par for all floor plans. Please note that it was not possible to describe all of the individual variations here. If you have any special questions concerning accessories or the technology of the vehicle, your dealer will be happy to answer them.

1.1 General information

Your HOBBY motor home has been built in accordance with the latest technology and approved safety regulations. Despite all precautionary measures, however, it is possible that passengers may be hurt or the motor home damaged if the safety instructions in this user manual and the warning stickers placed throughout the motor home are not observed. Please use the motor home only when it is technically in top condition.

Any defects that affect the safety of passengers or the motor home should be remedied immediately by trained personnel. The brake system and the gas system should only be checked and repaired by an authorised workshop.
Please ensure that all of the deadlines for checking equipment and inspections are met.

1.2 Before taking your first drive

Please do not consider this manual to be just a means of reference, but familiarize yourself thoroughly with it before taking your first drive.

Fill out the guarantee cards in the different manuals for the installed equipment and fittings and send them to the manufacturers. This will ensure guarantee claims for any of the equipment.

In accordance with guarantee conditions, HOBBY's dealer will give you a 5-year guarantee on the consistency of the motor home. Your dealer will give you a guarantee booklet, “5 Years‘ Guarantee on Consistency“ when you pick up your vehicle.

Note: If a consistency test has not been carried out, you will forfeit any claims for a 5-year guarantee on consistency.

Please note the following before operating the vehicle:

- **Check the tyre pressure.**
  Please refer to the section on tyre pressure.
- **Load the vehicle correctly. Keep to the technically permissible overall mass.**
  Please refer to the section on loading.
- **Load the batteries fully before each journey**
  Please refer to the section on the starter and accommodation batteries.
- **If the temperature outside is below 0° C, heat the vehicle before filling up the water system.**
  Please refer to the section on water supply/filling the fresh water tank.
- **Tighten the wheel nuts after having driven the first 50 km.**
- **Switch off all fitted devices that operate on gas before filling the petrol tank.**
- **Tightly strap gas bottles in the gas bottle box during transportation.**
- **When camping in winter, heat the vehicle at night if there is danger of frost.**
  Please refer to the section on operating in winter/heating.
- **Keep compulsory ventilation clear.**
  Please refer to the section on windows/roof fan/airing.
- **When the vehicle is not in use, empty the entire water system and leave the water faucets open in a neutral position. This prevents the water system from being damaged by frost.**
  Please refer to the section on emptying the water system.

1.3 Designations in the operating instructions

This manual explains the motor home in the following manner:

Texts and illustrations

Texts that refer to illustrations are found directly below the illustrations.

Details in illustrations (here: entrance) have been given item numbers (1).

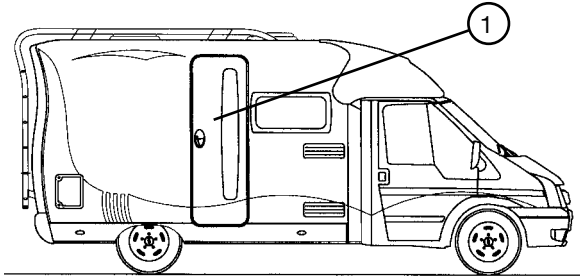

Lists

Lists are given in the form of key words and shown as bullet points using “-“.

Handling instructions

Handling instructions are also given in the form of key words beginning with the symbol “•“.

Notes

Notes point out important details that ensure your motor home and its fittings will function perfectly. Please remember that there may be some differences in description to the various kinds of equipment that can be supplied.

Warnings

Warnings make you aware of dangers that may lead to material being damaged or even people being hurt if they are not observed.

Environmental Tips

Environmental tips give you possibilities for lessening the impact on the environment.

Chapter 2: Safety

2.1 General information

- Ensure that there is sufficient ventilation. Never cover built-in compulsory ventilation (skylights with compulsory ventilation or roof fan). Keep compulsory ventilation free of snow and leaves - danger of suffocation!
- Note the headroom of the entrance door and the driver's door.
- Operating and user instructions for built-in equipment (refrigerator, heating, cooker, etc.) as well as for the basic vehicle must be observed at all times.
- If accessories or optional equipment is to be installed, this may change the measurements, weight and road performance of the motor home. Some accessories must be registred and entered in the vehicle's papers.
- Use only tyres and rims that have been approved for your motor home. Please refer to the vehicle's registration papers for information on tyre and rim sizes.
- Always use the parking brake whenever you park the motor home.

2.2 Fire protection

Precautions against fire

- Never leave children alone in the vehicle.
- Keep inflammable materials away from all heating and cooking devices.
- Any changes to the electric system, gas system or built-in devices may only be carried out by an authorised workshop.
- Install a fire extinguisher next to the main entrance.
- Familiarise yourself with the instructions on the fire extinguisher.
- Store a fire blanket near the cooker.
- Do not block any escape routes.
- Familiarise yourself with all safety measures set up on the property.

Fighting fire

- Immediately evacuate all passengers.
- Shut the valves of the gas bottles.
- Turn off the electric supply.
- Sound the alarm and call the fire department.
- Only fight the fire yourself if you can do so without risk.

2.3 Road safety

- Before driving, check that the signal and light equipment, steering and brakes all function properly.
- If the vehicle has been standing for a longer period of time (approx. 10 months) have an authorised workshop check the brake system and the gas system.
- Completely open and fasten the dimming system on the front and side windows.
- Passengers may not stay in the alcoves while driving.
- In winter, the roof must be cleared of snow and ice before driving.
- Regularly check the tire pressure before driving. False tire pressure can cause excessive wear, damage to the tires or even lead to a burst tire.
- Children's seats may only be mounted on seats that have a three-point seat belt installed by the factory.
- Turn the reversible seats in the direction of travel and lock them. The seats may not be turned while driving.

2.4 What to observe before taking your first drive

Vehicle registration

Every vehicle that drives on public roads must be registered. This also applies to your new motor home. Apply for registration at your local Driver and Vehicle Licensing Agency.

You must show the following when applying for registration:

- registration document, Part II
- insurance coverage
- proof of personal identity or confirmation of registration by a local authority
- if applicable, power of attorney to register the vehicle.

General inspection

In accordance with Section 29 of the German Road Traffic Licensing Regulations, your motor home must undergo a general inspection every two years during the first 72 months, after which a general inspection must be carried out every year. This general inspection can be carried out by the German Technical Surveyance Association (TÜV), the German Motor Vehicle Surveyance Association (DEKRA) or an officially approved expert.

For each general inspection you must show the following:

- registration document, Part I
- valid gas test certificate for gas installation.
  The initial certificate will be given to you together with the registration document.

Any changes made to the vehicle that underlie German Road Traffic Licensing Regulations must be officially authorised!

If you have any further questions or difficulties, your authorised Hobby dealer will always be available to assist you!

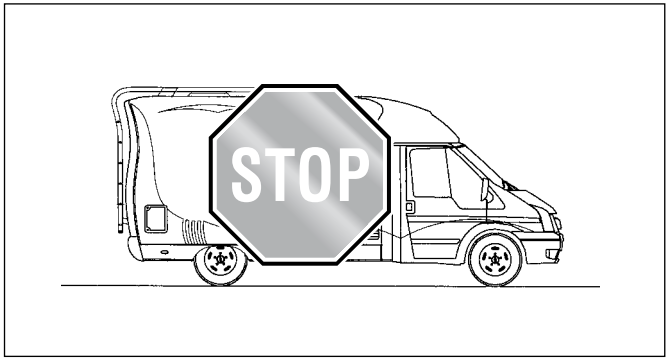

2.5 Before and while driving

As the owner / driver of the vehicle, you are responsible for the state of the vehicle. Please observe the following points:

Exterior

Check the exterior of the vehicle and carry out the following preparations before driving:

Preparing the vehicle

- If the leveling supports have been extended, retract them.
- Close all of the windows in the motor home as well as the skylights in the roof.
- Close and secure the entrances to the caravan and the service flaps.

- Close the tap for the sewage tank.
- Close all taps and quick-action stop valves for gas devices. The only exception is for heaters that are to be used while driving.
- If necessary, remove any electric cables from the exterior socket.
- If necessary, retract the TV antenna as for as possible.
- If necessary, secure any loads on the roof, ensuring that they will not slide.
- The same applies for bicycles.
- Turn off the light in the tent in front of the motor home.

Interior

Some preparations must also be carried out inside the mobile home.

Preparing the interior

- Sort loose objects and stow them in the compartments.
- Place heavy objects in the lower compartments.
- If necessary, switch refrigerator to 12 V operation.
- Ensure that no liquids, including those in the refrigerator, will leak.
- Secure gas bottles.
- Brace the safety device for the table.
- Firmly close doors (including refrigerator door), drawers and flaps.
- Heavy and/or voluminous objects (e.g. TV, radio) must be secured before driving.
- Completely open and secure the optional cockpit dimming system.

Do not overload the vehicle! It is imperative that you note the permissible axle loads, the technically permissible overall mass as well as the permissible height, width and length of the mobile home.

Place a note with all important measures and weights in a visible place in both the caravan and the driver‘s cabin.

Driver‘s cabin

Do not forget the following:

- Adjust the interior and exterior mirrors as well as your seat.
- Check the lights.

In addition:

- Check your tire pressure.
- Check all liquids, such as oil, cooling water, brake fluid and windscreen cleaning liquid, and fill them up if necessary.
- Turn off all gas devices (heating, refrigerator, etc.) before putting petrol in the tank.

Note: Never use your cell phone at the petrol station.

Before driving off

Before you drive off you should be able to answer the following questions with “yes“:

- Is there a first-aid kit and a warning triangle on board?
- Are all the lights working (headlights, dipped headlights, brake lights and blinkers)?

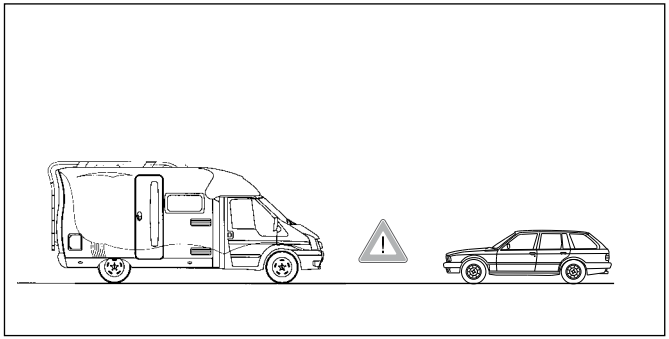

2.6 Notes for your journey

Your mobile home is not an automobile!

In many situations, it reacts very differently to a “normal“ automobile. Therefore, you should be prepared for the following differences:

Loading

The following applies for loading:

- Load evenly. Heavy or bulky objects should be placed in the lower compartments!
- Tie down roof loads securely!
- In the interior, store luggage in cupboards and compartments.

- Secure all doors and flaps.
- After you have finished loading, check the overall weight on a public scales.

⚠ Do not exceed axle loads and permissible overall weight.

Roof load (50 kg maximum)
The height of the mobile home may vary from one journey to the next due to different roof loads.

The following applies for roof loads:
- Add the measurement of the roof load to the height of the mobile home.
- Place a note visibly in the driver's cab giving the overall height. This saves having to calculate the height when driving under bridges and through tunnels.

Braking

The following applies for braking:
- Note the longer length of the brake path, especially on wet roads.
- When driving downhill, select a gear that is not higher than when driving uphill.

Shunting

Your mobile home is far larger than an automobile.

The following applies for shunting:
- Even if the exterior mirrors have been set correctly, there is an extremely large blind angle.
- Use assistance from other persons to park in places where you have a difficult view.

Passenger safety

The following applies while driving:
- Only those seats may be used by passengers that are equipped with a safety belt.
- While driving, passengers may note stay in the alcove or the beds.
- Passengers must remain in their seats with their seat belt on!
- Do not open the door latch!
- No extra passengers may remain in the vehicle!

Driving

Take a trial drive before leaving on your first large journey in order to familiarize yourself with the mobile home. Remember to practise driving backwards.

The following applies for driving:

- Do not underestimate the length of the mobile home.
- Be careful when driving into inner courtyards and through entrance gates.
- The mobile home may start to swing from side to side in cross-winds, on wet or icy roads.
- Adjust your speed to road and traffic conditions.
- Long descents with a slight gradient can become dangerous. Adjust your speed from the very beginning to allow you to speed up if necessary without endangering other automobiles.
- As a general rule, never drive faster downhill than uphill.
- The mobile home may be caught up in a slipstream when overtaking or being overtaken by lorries with trailers or buses. This effect is counteracted by lightly counter-steering.

Driving in reverse

The following applies for driving in reverse:

- Use the assistance of a person outside the vehicle when driving in reverse.

Driving through curves

Due to its height, a mobile home begins to sway more quickly than an automobile.

The following applies for driving through curves:

- Never drive too quickly into a curve!

Driving economically

The motor of your mobile home has not been designed to drive constantly under a full load.

The following applies when driving:

- Do not keep your foot down on the gas!
- The final 20 km/h before reaching top speed require up to 50 % more fuel!

Getting petrol

A number of devices that use an open flame have been built into your mobile home.

The following applies when getting petrol:

- Turn off all gas devices (heating, refrigerator, etc.)!
- Turn off all cell phones!
- Never get anything other than diesel fuel.
- Never mistakenly fill the fresh water tank with fuel.

Saving energy in winter

It is very easy to save energy inside your mobile home. This applies especially to heating in winter.

The following applies for saving energy:

- Meter the exact use of ventilation in the vehicle and the heating valve.
- Install winter mats on the inner sides of the driver‘s cabin and the windscreen (not included in scope of delivery).
- Install an insulation mat between the driver‘s cabin and the caravan (not included in scope of delivery).
- Use aluminium-coated window mats and window blinds. These offer protection against both the cold and the heat.
- Open the door as little and as briefly as possible.
- When camping in winter, it is possible to put up a small tent in front of the vehicle as protection against the cold.

2.7 Tools on board

Tools on board are located inside the entrance step.

2.8 Emergency equipment

To be prepared in case of an emergency, you should always carry the three emergency devices on board and familiarize yourself with them.

First-aid kit (standard equipment)
The first-aid kit should always be at hand and have a fixed position in your mobile home. Any objects removed from the first-aid kit should be replaced immediately. Expiry dates should be checked regularly.

Reflective jacket (not included in scope of delivery)
In acc. with EN 471, we recommend that you carry and wear a reflective jacket with white retro-reflective stripes whenever you leave the vehicle on open roads and emergency strips. The driver should wear this jacket when the vehicle

- comes to a stop outside city limits on an obscure rural road because of an accident or breakdown, if the view is poor due to bad weather, in twilight or darkness, or
- when it must be secured by means of a warning triangle on the emergency strip of the motorway because of an accident or breakdown.

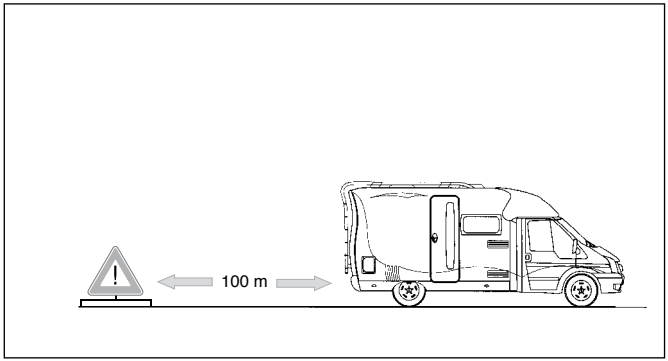

Warning triangle (standard equipment)
The warning triangle should also always be at hand and have a fixed position in your mobile home, preferably together with the first-aid kit.

In an emergency

- Set up the warning triangle at least 100 m in front of the danger zone!

Fire extinguisher (not included in scope of delivery)
Familiarize yourself with how to operate the fire extinguisher. Pay attention to the date when it must be refilled! The fire extinguisher must be checked every 2 years.

Precautions against fire

- Never leave children alone in the vehicle.
- Familiarize yourself with the position and use of the emergency exits.
- Do not block any escape routes.
- Keep inflammable materials away from all heating and cooking devices.
- Install a fire extinguisher next to the main entrance.
- Store a fire blanket near the cooker.
- Familiarize yourself with the instructions on the fire extinguisher.
- Familiarize yourself with all safety measures set up against fire on the property.

Fighting fire

- Evacuate all passengers.
- Close the valves of the gas containers.
- Turn off the electric supply.
- Sound the alarm and call the fire department.
- Only fight the fire by yourself if this can be done without risk.

2.9 Maximum speeds

Never exceed the maximum speed of the country in which you are driving!
The following table lists the maximum speeds for mobile homes in European countries.
(Status: 2000-01-03)

Country	Measurements (m)		Permissible overall	Maximum speed (km/h)		
	width	length	weight (t)	in cities	outside cities	on motorways
Belgium	2,50	12	up to 7,5 over 7,5	50	90/120 *1 60/90 *1	120 90
Bulgaria	2,60	11	up to 7,5 over 7,5	50	90 70	120 100
Denmark	2,55	12	up to 3,5 over 3,5	50	80 70	110 70
Germany	2,55	12	up to 3,5 3,5 up to 7,5 over 7,5	50	100 80 60	130 *2 100 *19 80
Estonia	2,50	12	up to 3,5 over 3,5	50	90 70	110 90
Finland	2,60	12		50	80 *15	80 *15
France	2,50	12	up to 3,5 over 3,5	50	90 *3/110 *1;3 80 *3/100 *1;3	130 *3 110 *3
Greece	2,50	12		50	110/120 *1	120
Great Britain	2,55	12		48	96/112 *1	112
Ireland	2,50	12		48	96/112 *1	112
Iceland	2,55	12		50	90 *4	
Italy	2,55	12	up to 3,5 over 3,5	50	90/110 *1 80	130 100
Yugoslavia	2,50	12	up to 3,5 over 3,5	60	80/100 *1 80	100 80
Croatia	2,55	12		50	80/100 *1	130 *18
Latvia	2,50	12	up to 7,5	50	90 *2	90
Lithuania	2,50	12	up to 3,5 over 3,5	50	90 70	110 *9

Country	Measurements (m)		Permissible overall	Maximum speed (km/h)		
	width	length	weight (t)	in cities	outside cities	on motorways
Macedonia	2,50	12		50/60	80	80
Netherlands	2,55 *14	12		50	80/100 *1	120
Norway	2,55	12,4	up to 3,5 3,5 over 7,5	50	80/90 *1 80	90 80
Austria	2,55	12	up to 3,5 3,5over 7,5	50	100 70	130 *8 80
Poland	2,50	12	up to 2,5 over 2,5	60	90 70	130 70
Portugal	2,55	12	up to 3,5 over 3,5	50	90/100 *17 80/90 *17	120 *7 90
Romania	2,50	12	up to 3,5 over 3,5	50 40	90 60	90 60
Russia	2,50	12		50	90 *10	90 *10
Sweden*16	2,60	24	up to 3,5 over 3,5	50	70/90 *17 80/90 *1	110 90
Sweden	2,60	24	up to 3,5 over 3,5	50	70/90 80/90	110 90
Switzerland	2,55	12	up to 3,5 over 3,5*12	50	80/100 100	120 100
The Slovakian Republic	2,50	12	up to 3,5 3,5 up to 6,0	60	90 80	130 80
Slovenia	2,55	12	up to 3,5 over 3,5	50	80/100 80	100 80
Spain	2,55	12		50	80/90/100	100
The Czech Republic	2,50	12	up to 3,5 over 3,5	50	90 80	130 80
Turkey	2,50	10		50	80	130
The Ukraine	2,50	12		60	90	110
Hungary	2,50	12	up to 3,5 over 3,5	50	80/100 70	120 80
Cyprus	2,50	16,5		50	80	100

*1: On expressways.
*2: Recommended speed 130 km/h.
*3: Reduce speed by 10 km/h on wet roads and by 20 km/h on motorways.
*4: On gravel roads: 80 km/h.
*5: On roads with more than one lane in both directions.
*6: On motorways.
*7: A driver who has not held his licence for more than one year may not drive faster than 90 km/h. Corresponding stickers (available in the offices of the ACP) must be applied visibly to the rear of the vehicle.
*8: From 10 p.m. to 5 a.m.: 110 km/h on all motorways with the exception of the A1 (Salzburg-Vienna) and the A2 (Salzburg-Villach).
*9: Up to 1100 ccm: 70 km/h, up to 1800 ccm: 80 km/h, over 1800 ccm: 90 km/h.
*10. 70km/h if the driver has held his licence for less than 2 years.
*11: In accordance with Section 57 a of the German Road Traffic Licensing Regulations, vehicles with a maximum overall weight of more than 7.5 t require a tachograph. However, it is in dispute whether this is also applicable for motor homes that are privately used.
*12: A heavy vehicle fee must be paid on all roads for all vehicles with a maximum overall weight of more than 3.5 t.
*13: The experience of the past few years has shown that objections are no longer raised with regard to extra-wide or extra-long German vehicles.
*14: 2.55 m on all main roads; 2.20 m on all roads marked “B“.
*15: Motor homes that were first registered from 1995 onwards with an empty weight of 1,875 kg as well as those first registered from 1981 onwards with an empty weight oof 1,800 kg may drive a maximum of 100 km/h.
*16: A closed sewage system is often mandatory on Swedish camping grounds.
*17: In accordance with the signs.
*19: 12th exception to the German traffic regulations for the German Road Traffic Regulations dated 2005-03-18.

Note traffic regulations nos. 253, 273 and 277 in accordance with Section 41 of the German Road Traffic Regulations.

Also note Sections 3, 7 and 18 of the German Road Traffic Regulations.

2.10 When you stop driving

Selecting a parking space

The following applies for selecting a parking space:

- Select a parking space that is as level as possible.
- If possible, pick your spot in daylight.

Securing the vehicle

The following applies when securing the vehicle:

- Put the vehicle in gear.
- Pull on the handbrake.
- If necessary, extend extra vehicle supports.
- If necessary, use blocks (not in scope of delivery).

If the temperature is below 0°, only pull the handbrake on lightly and ensure that the vehicle is in gear to prevent the handbrake from freezing!

When turning the driver‘ seat, ensure that you do not accidently disengage the handbrake.

Switching electric consumption:

The following applies when switching electric consumption:

- Switch the refrigerator from 12 V to gas or 230 V. Otherwise, if the motor is not on, the 12 V electrical supply will automatically turn itself off after a few minutes.

Water system

Empty the entire water system if the vehicle is not heated when there is danger of frost. Leave the water faucets as well as all drain valves open to prevent damage from frost.
Water that has been left to stand in the fresh water tank or water pipes quickly becomes undrinkable. Therefore, always flush the water pipes thoroughly with several litres of fresh water before using them.

Chapter 3: Chassis

3.1 Chassis

The chassis includes parts of the frame and the axles. No technical changes may be made, as otherwise the general type approval will expire!

Technical changes may only be carried out after being released by the manufacturer.

For further information, please refer to the enclosed operating instructions for the basic vehicle.

3.2 Loading

The maximum axle loads as well as the technically permissible overall mass entered in the vehicle‘s documents may not be exceeded.

Weights of mobile homes in accordance with 92/21/EWG

Please refer to the definition of masses for mobile homes!

Definition of Masses for Mobile Homes (2007)

Throughout Europe, EU Guideline 92/21/EWG is applicable for calculating the masses (weights) and resulting loads for mobile homes. The terms and basis used for calculations are explained below.

1. Technically permissible overall mass

The figure for the technically permissible overall mass is based on information given by the Hobby Mobile Home Plant in cooperation with the manufacturer of the base vehicle. This mass was determined in extensive calculations and tests and, for safety reasons, it may not be exceeded under any circumstances.

2. Mass when the vehicle is ready to start

The mass when the vehicle is ready to start corresponds to the mass of the empty vehicle including lubricants, tools, spare tyre (and/or repair kit), petrol (100 %), booster battery, all of the standard equipment mounted by the factory as well as 75 kg for the driver, plus basic equipment (gas, water, electric).

3. Basic Equipment

The basic equipment includes all of the equipment and liquids that are necessary to ensure safe and proper use of the vehicle. This includes the weights of:

	Siesta		
	T 555 FS T 555 AK FS	T 555 AK LC T 600 ... T 650 ...	T 650 ... Reduced load capacity 3500 kg
a) Supply of liquefied petroleum gas			
No. of 11 kg gas bottles	1	2	2
No. of 5 kg bottles	1	-	-
Weight of an 11 kg aluminium bottle	5.5	5.5	5.5
Weight of a 5 kg steel bottle	6.0	-	-
Weight of 11 kg gas inflation (90 %)	9.9	9.9	9.9
Weight of 5 kg gas inflation (90 %)	4.5	-	-
Total:	**26**	**31**	**31**
b) Liquids			
100 l fresh water tank (90 %)	90	90	-
10 l fresh water tank (90 %)	-	-	9
Total basic equipment:	**116**	**121**	**40**

4. Loading

Loading corresponds to the difference between the "technically permissible overall mass" and the "mass when the vehicle is ready to start". This value must take into consideration the masses for passengers (conventional load: 75 kg x no. of seats, driver excepted), additional equipment and personal belongings.

Check to ensure that the masses of all objects transported in the mobile home have been taken into consideration, e.g. passengers, additional equipment, basic equipment and personal belongings such as clothes, food, pets, bicycles, surfboards, other sport equipment, etc.).

Under no circumstances may the technically permissible total load be exceeded when the mobile home has been loaded.

The mass when the vehicle is ready to start includes an additional value for liquids and gas, etc. (see basic equipment). Part of this additional value can also be used for additional loads if, for example, you would like to travel with empty water tanks or without gas bottles.

5. Reduced load capacity for T 650 to 3500 kg

> Before driving, you must open the overflow valve for the fresh water tank.

To reduce the weight when the vehicle is ready to start, the fresh water tank has been fitted out with an overflow valve, located to the right in the seat and marked with a warning sign. Before you begin driving, open the overflow valve. The contents of the fresh water tank will run off until, for weight reasons, only approx. 10 litres are left. When the vehicle is standing, the valve can be closed, allowing you to use the full volume of the tank.
A reduced fresh water supply when the vehicle is ready to start has been entered in the vehicle's registration papers. The mobile home may only be operated on public roads when the overflow valve is open. The driver is responsible for ensuring that this requirement is fulfilled as well as for observing the technically permissible total weight.

Masses in standard condition, 2007 season

Model	Series	Weight of basic vehicle	Driver	Die-sel [kg]	Basic equip-ment	Mass when vehicle is ready to start	Techn. perm. total weight	Load	No. of seats	Conventi-onal load	Overload weight	Length of vehicle	Personal belon-gings	Remai-ning add. weight
T 555 FS	Siesta (C)	2560	75	68	116	2819	3500	681	4	225	456	5,8	98	358
T 600 FC	Siesta (C)	2625	75	68	121	2889	3500	611	3	150	461	6,4	94	367
T 600 GFLC	Siesta (C)	2720	75	68	121	2984	3500	516	4	225	291	6,4	104	187
T 600 GFS	Siesta (C)	2710	75	68	121	2974	3500	526	4	225	301	6,4	104	197
T 650 FLC	Siesta (D)	2835	75	68	121	3099	3850	751	4	225	526	7,1	111	415
T 650 FLC	Siesta (D)	2835	75	68	40	3018	3500	482	4	225	257	7,1	111	146
T 650 GFLC	Siesta (D)	2870	75	68	121	3134	3850	716	4	225	491	7,1	111	380
T 650 GFLC	Siesta (D)	2870	75	68	40	3053	3500	447	4	225	222	7,1	111	112
T 555 AK LC	Siesta (C)	2687	75	68	121	2951	3500	549	4	225	324	5,8	98	226
T 555 AK FS	Siesta (C)	2645	75	68	116	2904	3500	596	4	225	371	5,8	98	273
T 600 AK GFLC	Siesta (C)	2790	75	68	121	3054	3500	446	4	225	221	6,4	104	117
T 650 AK FLC	Siesta (D)	2885	75	68	121	3149	3850	701	4	225	476	7,1	111	365
T 650 AK FLC	Siesta (D)	2885	75	68	40	3068	3500	432	4	225	207	7,1	111	97
T 650 AK GFLC	Siesta (D)	2899	75	68	121	3163	3850	687	4	225	462	7,1	111	351
T 650 AK GFLC	Siesta (D)	2899	75	68	40	3082	3500	418	4	225	193	7,1	111	83
T 650 AK KLC	Siesta (D)	2872	75	68	121	3136	3850	714	4	225	489	7,1	111	378
T 650 AK KLC	Siesta (D)	2872	75	68	40	3055	3500	445	4	225	220	7,1	111	110

These figures refer to the standard vehicle without extra equipment. Deviations of up to 5 % are possible.

Tires and rims for basic mobile home vehicles, 2007 season

					Basic model with steel rims			Basic model with LM rims			
Hobby Model	Series	Techn. perm. overall weight [kg]	Perm. axle load front	rear	Tire size	Wheel attachment*	Steel rims	Tire size	Wheel attachment*	LM rims	Rim designation
T 555 FS	Siesta (C)	3500	1750	2250	215/75 R 16 C	5 / 65 / 160	5½ J x 16, ET 56	215/75 R 16 C	5 / 65 / 160	6½ J x 16, ET 60	CWC65640
T 600 FC	Siesta (C)	3500	1750	2250	215/75 R 16 C	5 / 65 / 160	5½ J x 16, ET 56	215/75 R 16 C	5 / 65 / 160	6½ J x 16, ET 60	CWC65640
T 600 GFLC	Siesta (C)	3500	1750	2250	215/75 R 16 C	5 / 65 / 160	5½ J x 16, ET 56	215/75 R 16 C	5 / 65 / 160	6½ J x 16, ET 60	CWC65640
T 600 GFS	Siesta (C)	3500	1750	2250	215/75 R 16 C	5 / 65 / 160	5½ J x 16, ET 56	215/75 R 16 C	5 / 65 / 160	6½ J x 16, ET 60	CWC65640
T 650 FLC	Siesta (D)	3850	1750	2600	185/75 R 16 C	6 / 139 / 178	5 J x 16, ET 107	---	---	---	---
T 650 GFLC	Siesta (D)	3850	1750	2600	185/75 R 16 C	6 / 139 / 178	5 J x 16, ET 107	---	---	---	---
T 555 AK LC	Siesta (C)	3500	1750	2250	215/75 R 16 C	5 / 65 / 160	5½ J x 16, ET 56	215/75 R 16 C	5 / 65 / 160	6½ J x 16, ET 60	CWC65640
T 555 AK FS	Siesta (C)	3500	1750	2250	215/75 R 16 C	5 / 65 / 160	5½ J x 16, ET 56	215/75 R 16 C	5 / 65 / 160	6½ J x 16, ET 60	CWC65640
T 600 AK GFLC	Siesta (C)	3500	1750	2250	215/75 R 16 C	5 / 65 / 160	5½ J x 16, ET 56	215/75 R 16 C	5 / 65 / 160	6½ J x 16, ET 60	CWC65640
T 650 AK FLC	Siesta (D)	3850	1750	2600	185/75 R 16 C	6 / 139 / 178	5 J x 16, ET 107	---	---	---	---
T 650 AK GFLC	Siesta (D)	3850	1750	2600	185/75 R 16 C	6 / 139 / 178	5 J x 16, ET 107	---	---	---	---
T 650 AK KLC	Siesta (D)	3850	1750	2600	185/75 R 16 C	6 / 139 / 178	5 J x 16, ET 107	---	---	---	---

* No. of tire bolts / centralising collars / bolt circle

Weight of accessories, T Series

Object	Weight (kg)
Additional exterior storage flap	1.0
Air-conditioning B 1901 (Dometic) (230 V)	31.0
Air-condition B 2000 (Dometic) (230 V)	34.0
Air-conditioning Truma Frostair 1700	26.3
Air-conditioning via vehicle engine	20.0
Alarm system	1.0
Bicycle carrier for 2 bicycles	7.2
Bicycle carrier for 3 bicycles	8.3
Carpet	6.0 - 11.0
Car radio with navigation system and CD player	3.0
Cassette radio with 2 loudspeakers	1.7
CD radio	1.6
Central hoovering system (Dometic)	5.4
Dashboard made of precious root timber	0.5
Duomatic L-Plus / Duo Comfort	2.0
DVD Navigation system with return passage video system	6.1
Exhauster hood	1.0
Gel battery Exide Gel G 80	27.0
Insulation mats for cockpit	0.5
Light for tent in front of mobile home (Dometic)	0.2
Loudspeakers (additional) in caravan)	1.7
Microwave oven	15.0
Motorisation 2.0 TDCi instead of 2.0 TDE (FORD)	10.0
Navigation system Travel Pilot E1	2.0
Oven	16.0
Parking distance control system with optical warning	2.0
Radio, preparation for	1.3
Remifront cockpit shade (plissé)	3.0
Return passage video system with flat screen	2.0
Satellite antenna, fully assembled (incl. 3 kg mast)	9.8
Skylight, elec. 600 x 600 REMistar	10.8
Solar system with 2 modules, each 50 W	16.0
Solar system with 2 modules, each 75 W / 85 W	18.0
Sun awning Omnistor, 300 x 250 cm	21.0
Sun awning Omnistor, 350 x 250 cm	25.0
TELECO digital satellit antenna w/ autom. search system	24.0
Towbar coupling, rigid	15.5
WAECO cruise control for FORD	1.5
Water purification filter (Dometic)	3.0

FORD Flex Package:	Air-conditioning system	20.0
	Exterior mirror, electric	1.0
	Window opener, electric	6.0
	Wheel covers	6.0
	Audio system 2000	5.0

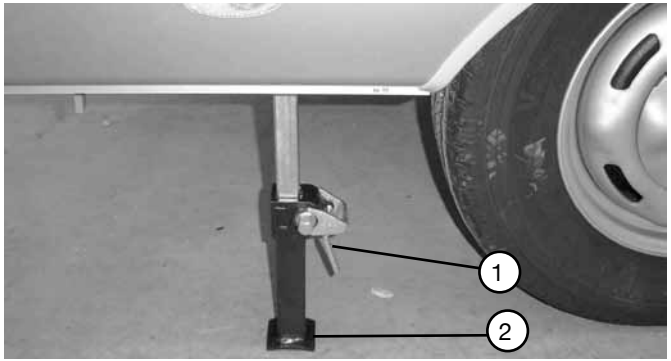

3.3 Leveling supports

Leveling supports, standard design

The leveling supports are located at the rear of your mobile home.

Swinging out the leveling supports

- To swing out the leveling supports, press fork (1) and pull towards hinge.
- Swing out leveling supports.
- If necessary, secure leveling supports from caving in.
- Place leveling support upon base (2).
- Use the crank to even out the leveling supports until the vehicle is in a level position.

Retracting leveling supports

- Use crank to release leveing supports.
- Retract leveling supports.
- To lock leveling supports, press fork (1).

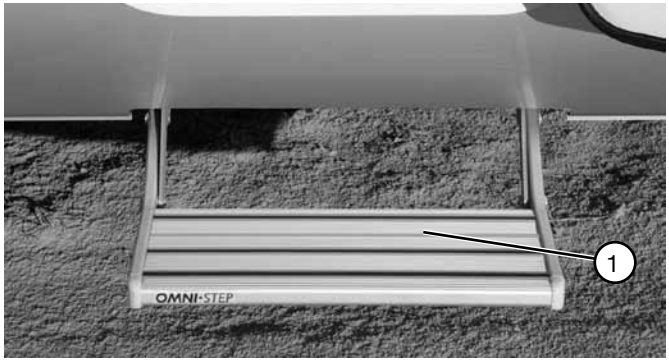

3.4 Entrance step

Your mobile home has an electric entrance step (1).

Use the switch on the inside, next to the entrance door to activate it.

Do not step on the entrance step until it has been completely extended!

Mind the different heights of the steps and ensure that the ground in front of the entrance is firm and level.

The entrance step is automatically retracted when the motor starts.

3.5 Externally mounted constructions

Registering accessories in the vehicle's documents

- Have your HOBBY dealer mount your externally mounted constructions.
- Drive your mobile home to the Technical Surveyance Association (TÜV).
- The TÜV will survey your externally mounted constructions and draw up an appropriate expertise.
- Take the expertise and the registration documents, Parts I and II, to the Driver and Vehicle Licensing Agency. They will copy the changes into the vehicle's documents.

☞ Do not forget that towbar couplings, motorcycle carriers, leveling devices and/or additional spring blades must be registered.

☞ Please note that mounting additional equipment reduces the load your mobile home can carry.

Chapter 4: Wheels, tires, brakes

4.1 Wheels

On your first drive with your mobile home, please check that your tire bolts are still securely tightened after having driven 50 km and, if necessary, tighten them with a torque of **160 Nm for 15" wheel rims (steel and light metal) and 180 Nm for 16" wheel rims (steel and light metal)**. After this, the tire bolts should be checked regularly that they are securely tightened.

4.2 Tires

Use only tires that have been entered in the vehicle's documents. Other tire sizes may only be used if they have been permitted by the manufacturer of the basic vehicle.

Driving to protect your tires

- Avoid braking sharply and racing starts.
- Avoid long drives on poor roads.
- Never drive an overloaded vehicle.

⚠ Tubeless tires have been mounted on your HOBBY mobile home. Under no circumstances may tubes be inserted in these tires!

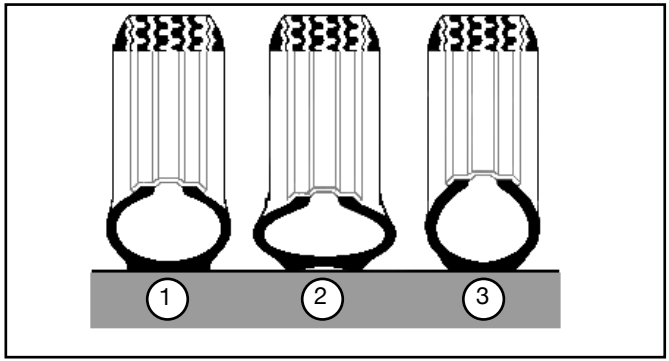

4.3 Inflation pressure

The inflation pressure of all tires as well as the spare tire should be checked approx. every 4 weeks and before you go on longer journeys.

The following applies when checking inflation pressure:

- Check the pressure only when the tire is cold.
- If checking or correcting the pressure of a warm tire, the pressure must be 0.3 bar higher than for a cold tire.

The following applies for inflation pressure:

- correct inflation pressure (1).
- inflation pressure too low (2).
- inflation pressure too high (3).

If the pressure is too low, this may cause overheating of the tire, possibly resulting in severe damage to the tire.

For the correct inflation pressure, please refer to the table in the chapter on “Technical Data“ or the operating instructions for the basic vehicle.

4.4 Tread depth

Replace your tires as soon as the tread depth is only 1.6 mm.

Tires may not be exchanged crosswise, i.e. from the right side of the vehicle to the left and vice versa.

Tires age even if they are used seldom or not at all.

Tire manufacturers‘ recommendations

- Irrespective of their tread depth, tires should be changed every 6 years.
- Avoid hard impacts against curbs, potholes or other obstacles.

4.5 Wheel rims

Use only those wheel rims listed in the vehicle‘s documents. Please observe the following points, should you wish to use other wheel rims.

The following applies when using other wheel rims:

- Size,
- construction,
- injection depth and
- carrying power must be sufficient for the permissible total weight.
- The cone of the fastening screw must correspond to the construction of the wheel rim.

Adaptations are only permitted if these have been released by the manufacturer.

For explicit information, please refer to the General Type Approval ("Allgemeinen Betriebserlaubnis", ABE).

Aluminium wheel rims must be tested separately for each type of vehicle. The screws used on aluminium rims may not be used for steel rims. When using aluminium rims, tires may not be changed from the front to the back or vice versa.

4.6 Snow chains

Use snow chains only on the front axle.

Never drive faster than 50 km/h.

Do not use snow chains on snow-free roads.

Ornamental hub caps must be removed before putting on snow chains.

4.6.1 Models with front-wheel drive

If you wish to use snow chains, the wheels on the front axle must use tires size 195/75 R 16 C (M+S) on steel rims 5.5 J x 16 H2, ET 50. You may leave the tires size 215/75 R 16 C on the rear axle. This tire mix is covered by Ford's basic approval and, therefore, does not require extra permission.

Tires size 195/75 R 16 C (M+S) must be inflated to the maximum admissible pressure of 4.8 bar. Snow chains may only be used with steel rims and only on the front axle.

4.7 Spare tire

A spare tire is not included in the scope of delivery.

4.8 Repair kit

Do not use the tire repair kit if the tire was damaged as a result of driving without air. Small cuts, especially in the tire tread, can be resealed using the tire repair kit. Do not remove foreign objects (such as screws or nails) from the tire. The tire repair kit can be used as long as the outside temperature is approx. -30° C or higher.

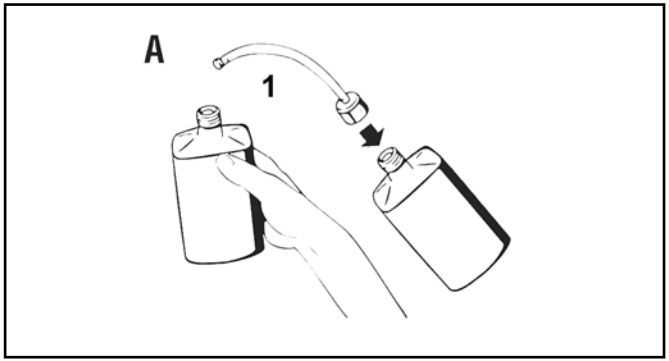

A Shake the bottle. Open the fill hose (1) on the bottle (foil seal is thereby punctured).

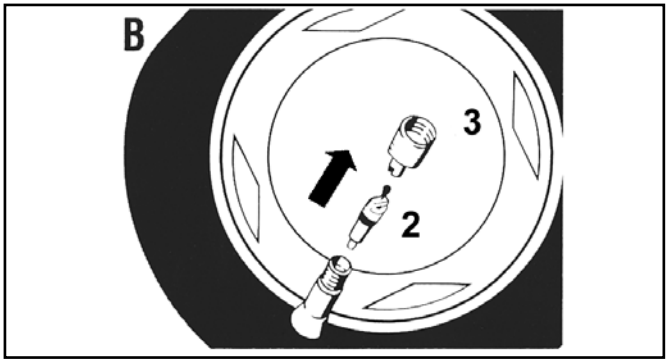

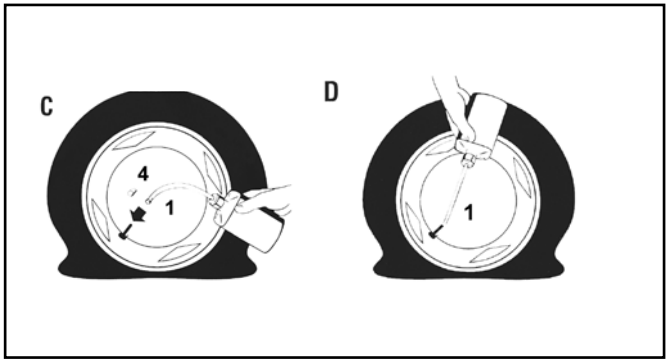

B Unscrew the valve cap from the tire valve.
Remove the valve insert (2) with the valvecore remover (3).
Do not lay the valve insert (2) down in sand or dirt.

C Pull the stopper (4) from the fill hose (1). Push the fill hose onto the tire valve.

D Hold the bottle down with the filling tube and then press them together. Press the entire bottle contents into the tire. Pull the fill hose off (1) and screw the valve insert (2) tightly into the tire valve with the valve-core remover (3).

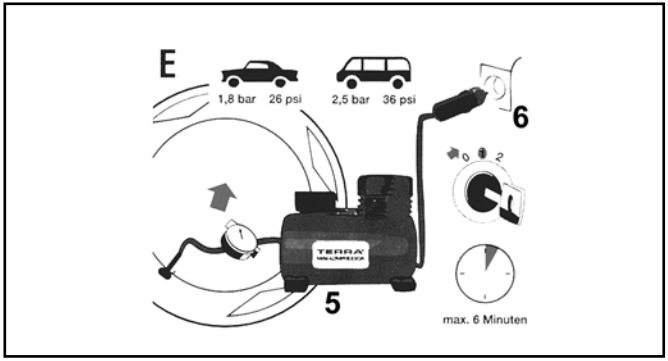

E Open the air hose (5) on the tire valve. Insert the plug (6) into the cigar lighter socket. Then pump the tires (Fig. 7). do not operate the electric air pump longer than 8 minutes! Danger of overheating! If sufficient air pressure is unattainable, drive 10 meters (either forward or in reverse) so that the sealant can be evenly distributed within the tire. Repeat the pumping process. Resume driving immediately, so that the sealant can be evenly distributed within the tire.
Maximum speed: 80 km/h. Drive carefully, especially in curves.
Check tire pressure after driving 10 minutes. If the tire pressure has fallen under this minimum value (8), you may not drive any further.
If the minimum value is still indicated (8), correct the tire pressure according to the tire pressure table in the gas bottle container. Drive carefully to the nearest mechanic and have the tire replaced.

Danger of accidents! If the required tire pressure is still unattainable, the tire is too severely damaged. In this case, the tire repair kit can no longer provide an effective seal. Therefore, do not drive any further. Notify a service station or the 24-hour service hotline.

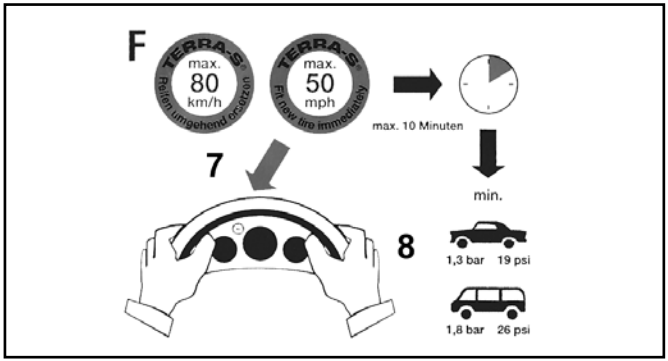

F Adhere the provided sticker to the combination instrument within sight of the driver. Dispose of used tire repair kit at a service station.

> **Danger of accidents!** Have the tires replaced at the nearest service station.

4.9 Changing the tire

> Further information is given in the operating instructions of the manufacturer of the basic vehicle.

4.10 Brakes

The components in the brake system are part of the General Type Approval ("Allgemeinen Betriebserlaubnis", ABE).
If you change the components in the brake system, the type approval expires. Any changes are only possible if they have been released by the manufacturer.

> In your own interests, you should have the brakes checked regularly by your Fiat or Peugeot repair shop.

The following applies when maintaining the brake system:

- Check the level of brake fluid regularly.
- Check the brake system and brake hoses regularly for leakage. Martens often gnaw at rubber hoses.
- Use only those brake oils that have the same features as the oils that are already in the brake circuit.

> Further information is given in the operating instructions for the Ford Transit.

Chapter 5: Exterior Structure

5.1 Overview of tank and service flaps

T555 FS Siesta 2007

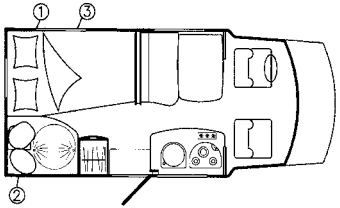

T600 GFLC Siesta 2007

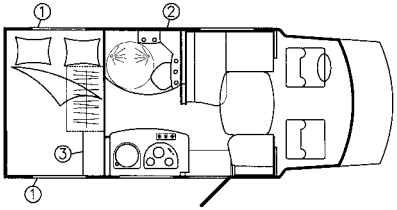

Storage flap (1)
Toilet flap (2)
Gas box flap (3)

T600 FC Siesta 2007

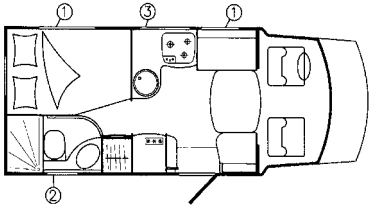

T600 GFS Siesta 2007

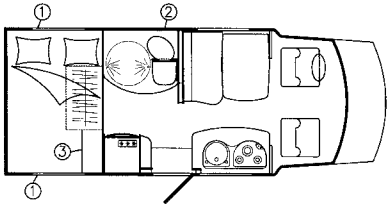

T650 FLC Siesta 2007

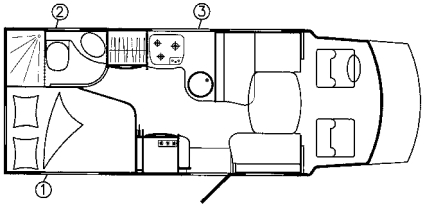

Storage flap (1)
Toilet flap (2)
Gas box flap (3)

T650 GFLC Siesta 2007

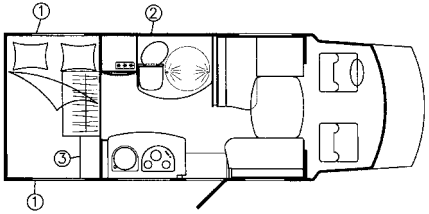

5.2 Ventilation

The following applies for ventilation:
Ventilation is important if you want to feel comfortable in your mobile home. No-draught ventilation has been integrated above the driving unit in your mobile home. The roof lights ensure ventilation. Never interfere with the way in which they operate.

Appropriate covers can be used to close the ventilation of the refrigerator, provided it does not run on gas.

Note the information given on the covers. They may only be used when the refrigerator is operated electrically in winter. For more information, please refer to the refrigerator manufacturer‘s operating instructions.

Watery vapour is produced while cooking, from wet clothes, etc. Every person transpires up to 35 g of water per hour. Therefore, depending on the relative humidity, the windows and skylights must be opened for further ventilation (see also “Operating in Winter“).

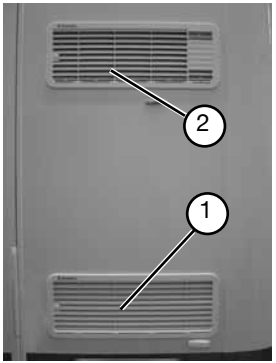

Refrigerator
Grates supply the refrigerator with fresh air from outside to ensure sufficient refrigerating capacity. The grate for fresh air intake (1) is on the outside wall of the vehicle. The grate for expelling used air (2) is above the grate for fresh air intake.

Danger! You can suffocate if the ventilation openings are blocked! Never block ventilation openings.

Apply special covers when operating the mobile home in winter. These covers can be purchased from your dealer.

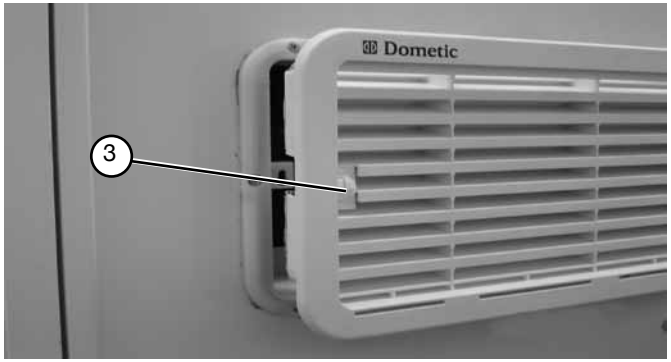

We recommend that you remove the ventilation grate if the outside temperature is very high. This allows more air to permeate to the refrigerator, intensifying refrigeration.

Removing the ventilation grate

- Turn the screw (3) as far to the left as it will go.
- Carefully pull out the ventilation grate, starting on the left.
- Then remove the ventilation grate.

Heating

The heating system is supplied with fresh air from outside (1). This ventilation flap also permits exhaust air from the system to escape.

Danger! You can suffocate if the ventilation openings are blocked!
Never block ventilation openings.

5.3 Opening and closing doors and flaps

Keys to the vehicle

The following keys are supplied with the motor home:

- one master key
- two keys for the following locks on the basic vehicle:
  - driver‘s door and passenger door

> Note the manufacturer‘s operating instructions for the basic vehicle.

- two keys that fit the following locks on the structure:
  - entrance door
  - service flaps
  - toilet flaps

> In addition, a self-adhesive aluminium plate is supplied, engraved with the number of the key for the basic vehicle.

Entrance door

Opening

- Use key to unlock door.
- Pull on door handle.
- Open door.

Closing

- Close door.
- Turn key until you hear the bolt lock into place.
- Turn key back to verticle position and pull it out.

To avoid damaging the lock and the doorframe, the inner door handle must be in a horizontal position and not slanted upwards.

Remember that the entrance door is your escape route in an emergency. Never barricade the door from the outside!

Luggage trunk flap

Opening

- Use key to unlock flap.
- Place your hand over the lock and give the flap a strong push inwards.
- Pull the flap upwards to open.

Closing

- Pull the flap down to close.
- Lock it with the key.

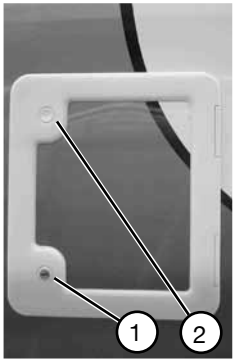

Toilet flap

Opening
- Use key to unlock flap (1).
- Press both buttons (1 and 2) and open flap.

Closing
- Press flap until it locks into place.
- Use key to lock flap (1).

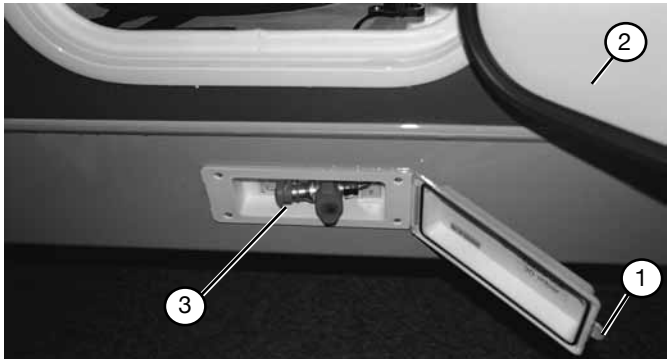

Exterior gas supply

At the customer‘s request, the mobile home can be fitted with an exterior gas supply (3). Equipment that uses gas, such as a gas grill or a gas lamp, can be supplied from outside the mobile home. The exterior gas supply is located below the gas box flap (2).

Opening
- Pull the cover plate (1) of the flap towards you.

Closing
- Press the cover plate (1) of the flap shut until you hear it lock into place.

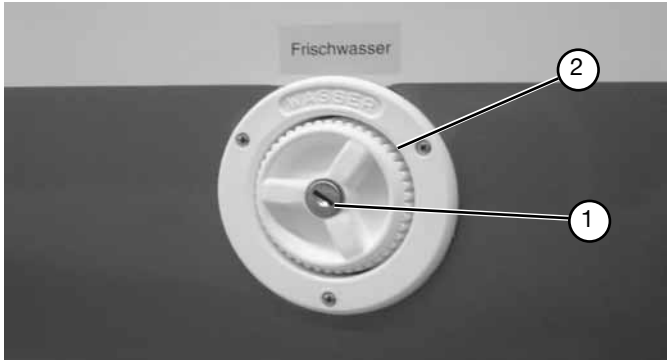

Fresh water filler neck

Opening

- Use key to unlock (1).
- Turn lid (2) firmly and remove.

Closing

- Insert lid (2) and turn it closed.
- Use key to lock (1).

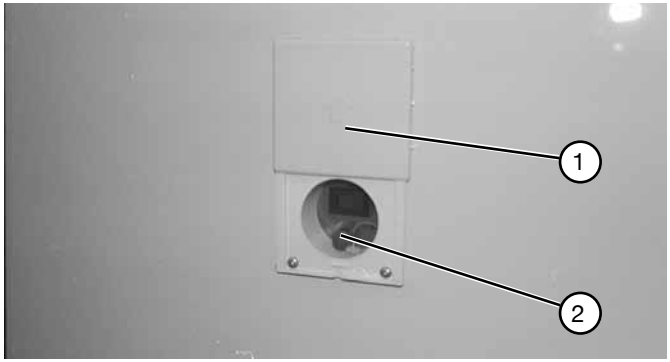

Water supply for exterior shower

Opening

- Slide cover flap (1) up to gain access to water supply.

Closing

- Remove hose for exterior shower from branch neck (2) and insert protective cap.
- Slide cover flap down.

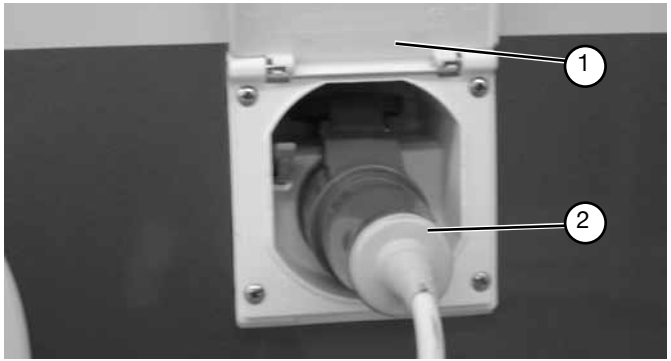

Exterior socket

Opening

- Take hold of the bottom of the cover flap (1) and pull it upwards.

Closing

- Remove CEE plug (2).
- Push cover flap (1) down until you hear it lock into place.

5.4 Exterior mirror

Please refer to the operating instruction for the basic vehicle for information on how to adjust the exterior mirrors of your mobile home.

5.5 Condensation in headlight systems

One of the problems often complained about is condensation on tthe outer glass of headlights or rear lights mde of clear glass. This appears after driving in the rain or on cold nights, and is a normal physical process. The expanding warm air is displaced through headlight vents from a lamp that has been turned on. After being turned off, the lamp slowly cools down and moist air from outside permeates inside through the vents. This moisture evaporates in the warm headlight and cools down to become condensation on the outer glass. This process is known as condensation. After a short drive in dry weather or after the headlight has been on for a brief period a process of evaporation sets in which drys off the condensation. Technically speaking, this process is harmless, because the lamps are protected against any influences from condensation.

Chapter 6: Electrical Installations

6.1 Safety instructions

The following must be observed:

- Do not remove the signs on electrical components giving safety instructions or danger warnings.
- Do not use the installation compartments for the caravan battery, on-board control panel, battery charger and 230 V connector box as additional storage room.
- Smoking and open fire are forbidden when checking electrical equipment.
- Only authorised and experienced workshops may carry out electrical repairs.
- Inexpert handling of the vehicle‘s electrical system may endanger your own life as well as that of others.
- Use only weatherproof, 3-wired extension cable and shock-proof plug or CEE plug and coupler when hooking up to an external 230 V network.

6.2 HOBBY on-board control panel

The electric power supply is provided via the HOBBY on-board control panel in connection with an automatic battery charger.

Main elements of the electric system

- "PC-100HB and PC-100HB T" CONTROL PANEL - controls the electric power consumers,
- 12V DISTRIBUTON MODULE "DS-300HB" - main relay, battery parallel relay (12V - 70A), refrigerator relay, pump relay, charging facility B1, safety fuses.
- BATTERY LOADING DEVICE - loads the battery in buffer operation.
- PROBE WITH ROD - measures contents of fresh water tank, 4-state visualisation
- PROBE WITH SCREWS "SSP" - LED display shows when sewage tank is full
- CONSUMER BATTERY "B2" - supplies all consumers
- VEHICLE BATTERY "B1"
- GENERATOR - loads both the vehicle and consumer batteries at the same time
- 230V MAIN SWITCH - supplies and protects the 230V consumers
- 50A FUSES VEHICLE/ and CONSUMER BATTERIES

Advice and instructions

Important!

- Any changes to the electrical installation may only be carried out by a professional electrician.
- Disconnect the battery and switch off the 230V mains before carrying out any maintenance work.

Batteries

- Please observe the battery manufacturer's operating instructions.
- The acid in the battery is poisonous and corrosive. Avoid contact with eyes and skin.
- If the battery is completely empty, it must be recharged for a minimum of 10 hours. If the battery has been empty for at least 8 weeks, it may be damaged.
- Check the amount of liquid in the batteries (acid batteries) regularly; gel batteries require no maintenance, but must continuously be recharged.
- Check the level of the battery fluid regularly (lead storage battery).
- Check that the clamps are still on properly and remove any layers of oxide.
- Unclamp the minus pole if the battery is not being used for a longer period of time (more than 1-2 months).
- Should the consumer battery be removed, isolate the plus pole (to prevent short circuits when turning on the motor).
- If you are stopping in one place for a very long time, unclamp the battery or recharge it regularly.

Battery charger

- Install the battery charger in a dry and well-aired room.
- This device may only be mounted by a professional.
- In case of misuse, the guarantee and the manufacturer's liability will no longer apply.
- Do not carry out any maintenance work as along as the 230V mains is still connected.
- Never plug up the ventilation on the lid; ensure that there is sufficient ventilation.
- Turn off the switch before disconnecting the battery charger from the 230V mains.

Tank probes

- To avoid incrustations, especially in the sewage tank, never let the water in the tanks stand for too long.

230V main switch

- Before removing the lid, check that the plug for the electric mains has been unplugged.

- To avoid damage to the module, ensure that the plugs are plugged in firmly.
- To switch off the power supply for the entire system, set the main switch 230 to "0" (OFF).
- Connect and disconnect the system to the 230V external mains only when the main switch is off.
- Should the switch be automatically interrupted, check the system for defects before switching the power supply back on.

Fuses

- Only replace defect fuses after you have found the reason for the defect and fixed it.
- The new fuse must have the same amperage as the old one.

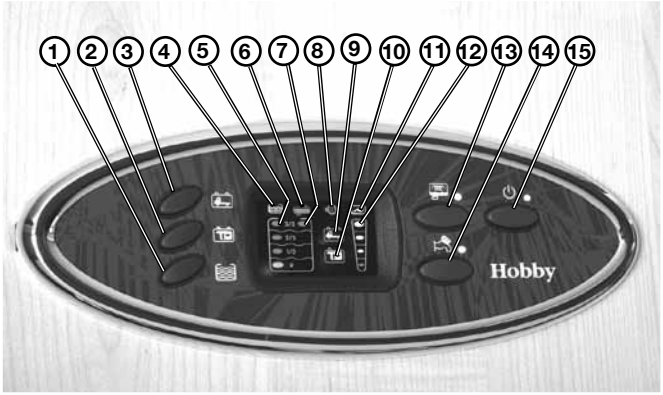

Siesta control panel

Description

1) Button for monitoring fresh water tank.
2) Button for monitoring consumer battery (B2).
3) Button for monitoring vehicle battery (B1).
4) LED signals test in fresh water tank; blinking signals empty tank.
5) LEDs signal level of fresh water tank.
6) LED signals test in sewage tank; blinking signals full tank.
7) Blinking LED signals full sewage tank; LED 6 also signals alarm.

8) Signals that generator is charging vehicle and consumer batteries.
9) LED signals test of vehicle battery; blinking signals empty battery.
10) LED signals test of consumer battery; blinking signals empty battery.
11) LED signals that 230V mains is connected.
12) LED voltmeter for monitoring voltage of vehicle and consumer batteries.
13) Control switch for sewage tank resistance; dependent on main switch and functions when motor is switched on or 230V mains is connected.
14) Switch for water pump that operates pump relay; dependent on main switch.
15) Main switch for consumers; blinking LED signals that consumer battery is almost empty and protection against total discharge will soon be activated.

Functions

Protection against total discharge

An electronic installation turns off all 12V consumers when the consumer battery reaches a minimum voltage of 10V. The consumers can be switched on again for approx. one minute by switching the main switch on again.

The refrigerator, electric entrance step and those consumers directly supplied by B2 are not affected by this installation.

12 V - Distribution panel

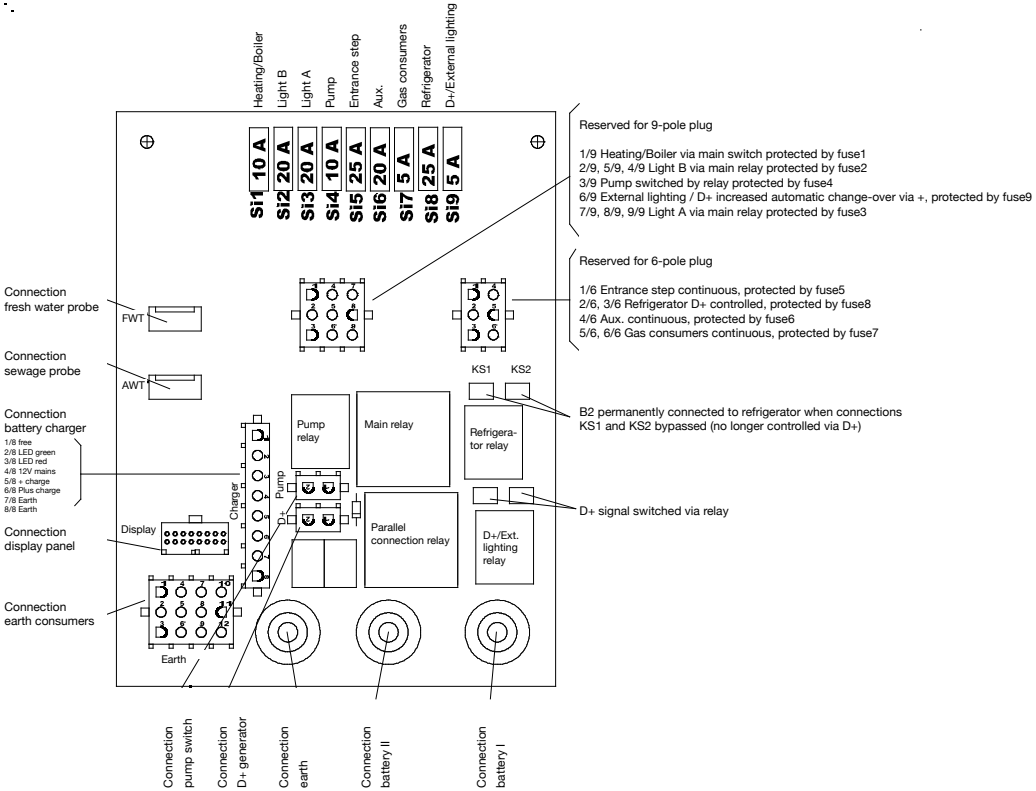

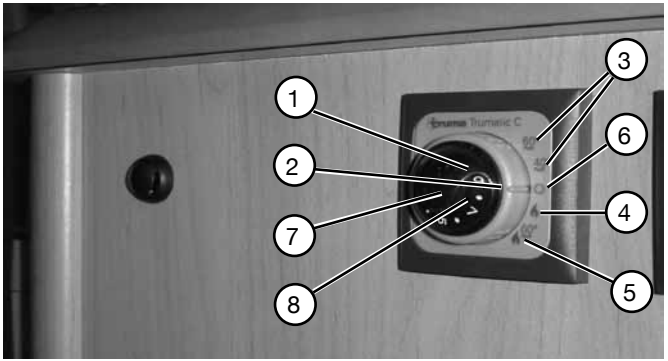

Gas operation (heating and warm water)

- Dial for room temperature (1)
- green “operating“ control light (2)
- summer operation (water temperature 40°C or 60°C (3)
- winter operation (heating without need for warm water) (4)
- winter operation (heating with need for warm water) (5)
- rotary switch “off“ (6)
- yellow control light: “boiler in heating phase“ (7)
- red control light: “malfunction“ (8)

For further information, please refer to the enclosed TRUMA operating manual.

6.3 Electric power supply

Your mobile home has the following connections for electric power supply:

- electric mains (a.c. voltage 230 V)
- caravan battery (d.c. voltage 12 V)

Electric power supply from the electric mains

The 230 V system is protected by a 2-pole circuit breaker with 16 A. The circuit breaker is located behind the driver‘s seat. Should there be a malfunction, the passenger circuit breaker opens the entire 230 V circuit. In most cases, such a malfunction is caused by a defect piece of electric equipment or a defect in its supply line.

- Repair the defect before switching the circuit breaker on again.
- If the defect cannot be repaired, consult an experienced electrician.

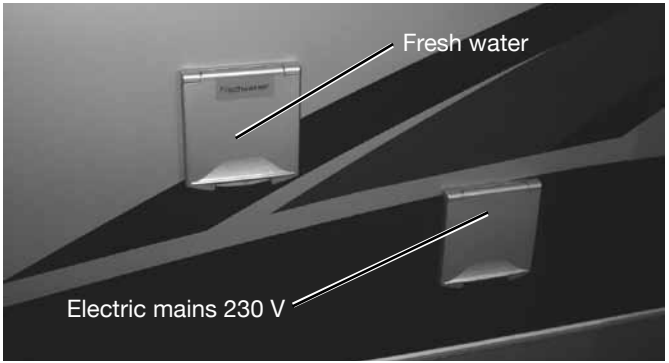

The following applies for the electric mains:

- the power supply lead may not be longer than 25 m.

> If you are using a cable drum without protection against overheating, the electric cable must be completely unwound from the cable drum.

- Use only plugs and cables that meet CEE standards.
- First, make the connection to the main socket (1) of the vehicle.
- Then insert the other plug in the live socket.
- Follow this sequence in reverse when you pull out the plug.

6.4 Function of the power generating unit

Position of the battery charger

The battery charger is located in the driver's seat.

Operating with 230 V electric mains

After switching on the master switch on the HOBBY on-board control panel, the caravan battery will be charged by the battery charger in the mobile home.

Charging procedure

The charging procedure is dependent on the battery voltage of the caravan battery:

- Charge until the battery voltage has reached 14.4 V.
- Switch off the battery charger until the battery voltage has sunk to 13.8 V.
- Recharge when the battery voltage sinks below 13.8 V.
- Make a parallel connection and charge the engine battery as well as the caravan battery when the battery voltage sinks below 13.5 V.
- Separate the engine battery and the caravan battery when the joint battery voltage sinks below 12.5 V.

The battery voltage of both the engine battery and the caravan battery can be checked continuously on the on-board control panel located above the entrance door.

The battery charger only works if the batteries have been inserted with their poles in the right direction.

A discharged caravan requires a charging period of approx. 12 hours on the electric mains to completely recharge itself. This charging period must be extended accordingly if equipment that uses 12 V is switched on at the same time.

Protection against total discharge

If the battery voltage of the caravan battery sinks below 10.5 V, a relay shuts down all the equipment that uses voltage.

If the protection against total discharge takes effect, turn off the 12 V master switch to avoid an additional discharge of the caravan battery.

Function of the battery charger

Protecting the device

If the battery charger should become hot because of high environmental temperatures or high charging currents, a built-in thermal switch turns off the battery charger until the temperature in the battery charger has dropped again.

Checklist

- Turn off the motor.
- Turn off the mains switch on the battery charger.
- Connect the battery charger to the mains supply.
- Switch on the 12 V master switch.
- Turn off all equipment (except refrigerator) that uses 12 V.
- Turn on the mains switch on the battery charger.

The voltage of the caravan battery must rise to a maximum voltage of 14.4 V.

If this does not happen after using the built-in battery charger to charge the battery, check the following:

- Has the battery charger been properly attached to the network?
- Is the mains fuse of the battery charger functioning properly?

- Is the battery voltage of the battery charger above 1 volt?
- Have the poles of the caravan battery been attached properly?
- Is the connection between the battery charger and the on-board control panel functioning properly?

Operation when the motor is running

As soon as the motor is running, a relay connects the starter battery and the caravan battery in parallel. The D+ signal sits close to the dynamo. Therefore, the dynamo charges both batteries. If the D+ signal no longer sits close to the dynamo, the two batteries will be separated from each other again. In this way, the starter battery cannot be discharged by equipment in the caravan.

The 12 V supply for the refrigerator only functions when you are driving. If the motor has stopped, the 12 V operation of the refrigerator is automatically turned off again.

> To charge a discharged caravan battery optimally while driving, disconnect the 12 V operation of the refrigerator and turn off as much equipment as possible that uses 12 V.

Checklist

- Turn off the motor.
- Switch on the 12 V master switch.
- Turn off all equipment that uses 12 V.
- Start the motor.

The voltage of the caravan battery must rise if

- the engine speed is above the idling speed,
- the vehicle‘s battery is not completely discharged.

If this does not happen after using the dynamo to charge the battery, check the following:

- Is the fuse in the supply line to the vehicle‘s battery functioning properly near the vehicle‘s battery?
- Have the poles of the caravan battery been attached properly to the battery charger?
- Is the fuse in the supply line to the “D+“ signal functioning properly near the vehicle‘s battery?
- Is the “D+“ signal sitting close to the battery charger? There must be a voltage of 12 V here when the motor is running.
- Is the connection between the battery charger and the on-board control panel functioning properly?

Operation by means of a 12 V caravan battery

All of the equipment is automatically supplied from the caravan battery if the mobile home is standing still without a 230 V mains supply and with its engine turned off. The 12 V master switch must be switched on.

The caravan battery should only be allowed to discharge to a voltage of 11 V. At this point, you should ensure that it is recharged from the dynamo or from public supply.

6.5 Caravan battery

Location

- Under the driver's seat, in the double bottom or in a separate compartment that is externally accessible, depending on the floor plan.

Features

- The battery does not require maintenance. It does not need to be refilled with water.
- The battery is closed off and cannot leak.
- The battery is cycle-proof, making it especially suitable for the supply of the board network. Several discharging/ charging operations are possible.

Use only the same kind of batteries when exchanging the battery (same capacity and voltage, cycle-proof, maintenance-free and leakproof).

Changing the battery

- Please do not smoke when changing the battery.
- Disconnect the connection to the 230 V network.
- First, disconnect the minus (-) connector.
- Then disconnect the plus (+) connector.
- Remove the battery.
- Insert the new battery.
- Use the reverse sequence to connect the new battery.

The solution of electrolytes contained in the battery is poisonous and corrosive! Protect your eyes and face whenever handling the battery.

If your skin or eyes come into contact with this solution, wash immediately with lots of clear water.

Keep open flames or equipment that gives off sparks away from the battery. Danger! Explosive!

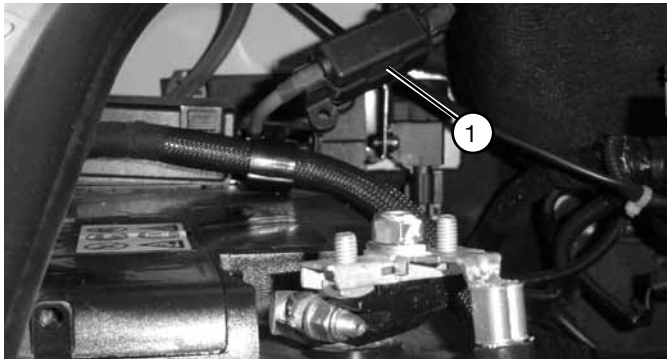

6.6 Fuse protection of the electric system

Starter battery

The main fuse protection is carried out by a 40 A safety fuse (1). The fuse is located under the hood next to the starter battery.

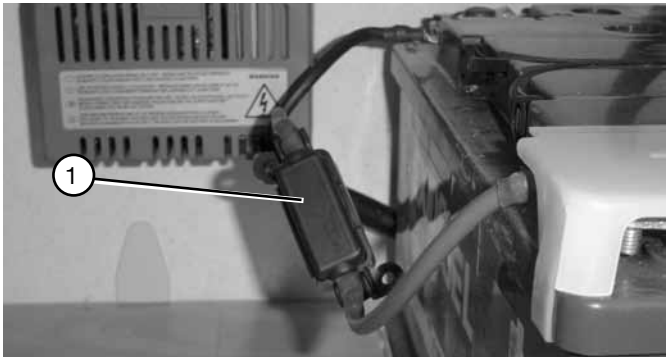

Caravan battery

The main fuse protection is carried out by a 30 A safety fuse (1). The fuse is located right next to the battery.

12 V circuits

These are protected by overload releases on the HOBBY control panel.

Information on fuses

15 A: refrigerator
10 A: light
10 A: pump, boiler, heating, TV

The following applies if one of the devices breaks down:

- Check the fuse on the corresponding electric circuit.
- Press the operating button.
- If the fuse goes off again, please speak to your authorised Hobby dealer.

Charger with fuse box

- The charger with separate fuse box is located under the passenger seat.

6.7 Interior circuit diagram

T555 AK-LC/T555 AK-SC

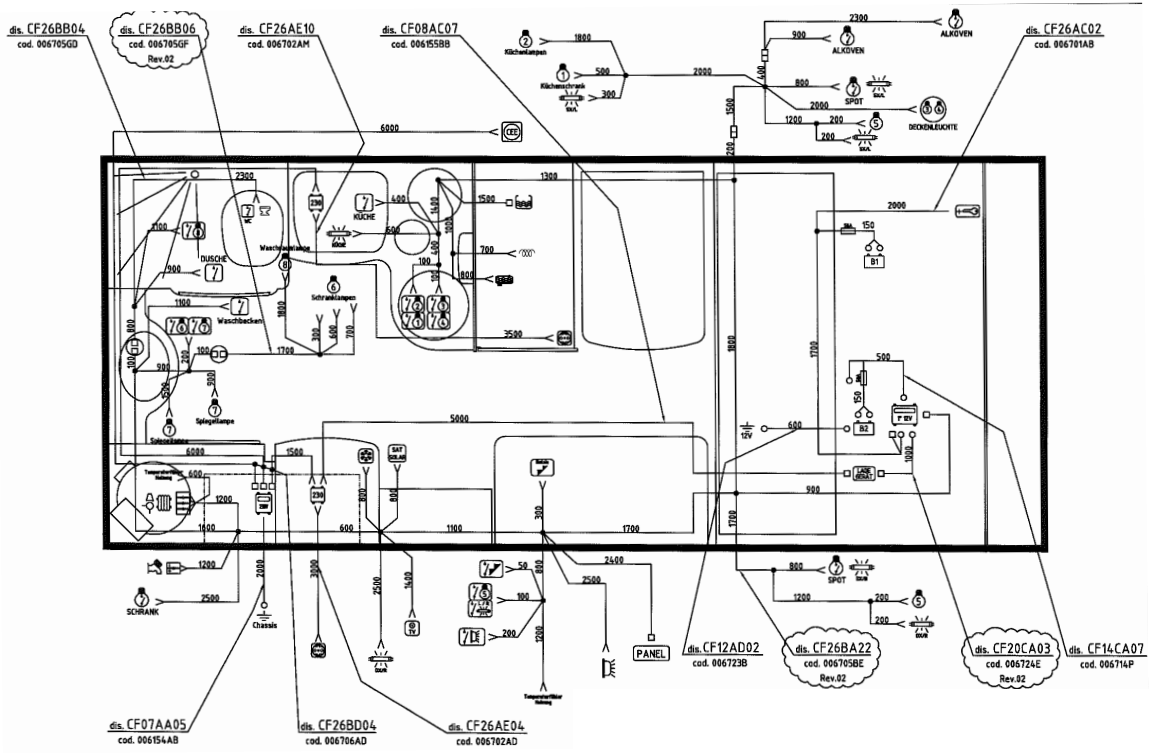

T555 AK-LC/ T555 AK-SC

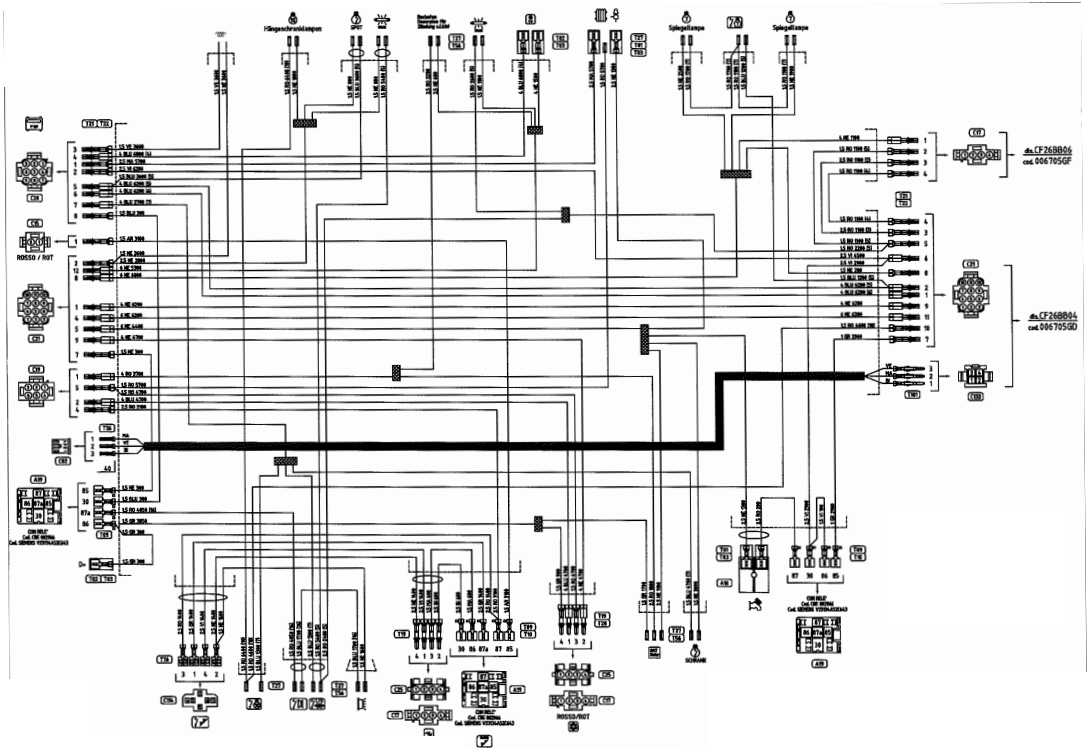

T555 FS u. AK

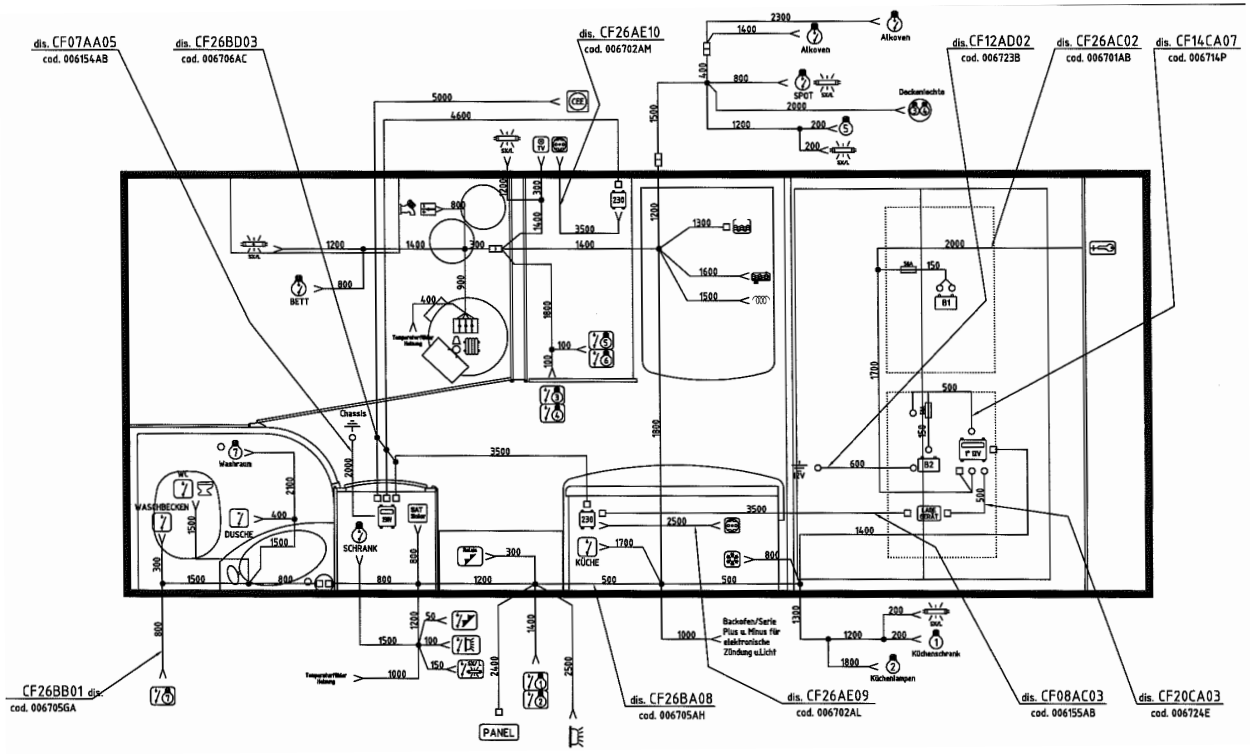
dis. CF07AA05
cod. 006154AB
dis. CF26BD03
cod. 006706AC
dis. CF26AE10
cod. 006702AM
dis. CF12AD02
cod. 006723B
dis. CF26AC02
cod. 006701AB
dis. CF14CA07
cod. 006714P
Alkoven
Alkoven
SPOT
Deckenleichte
BETT
Chassis
Waschraum
WASCHBECKEN
DUSCHE
SCHRANK
KÜCHE
Backofen/Serie Plus u. Minus für elektronische Zündung u.Licht
Küchenschrank
Küchenlampen
CF26BB01 dis.
cod. 006705GA
dis. CF26BA08
cod. 006705AH
dis. CF26AE09
cod. 006702AL
dis. CF08AC03
cod. 006155AB
dis. CF20CA03
cod. 006724E
PANEL

T555 FS u. AK

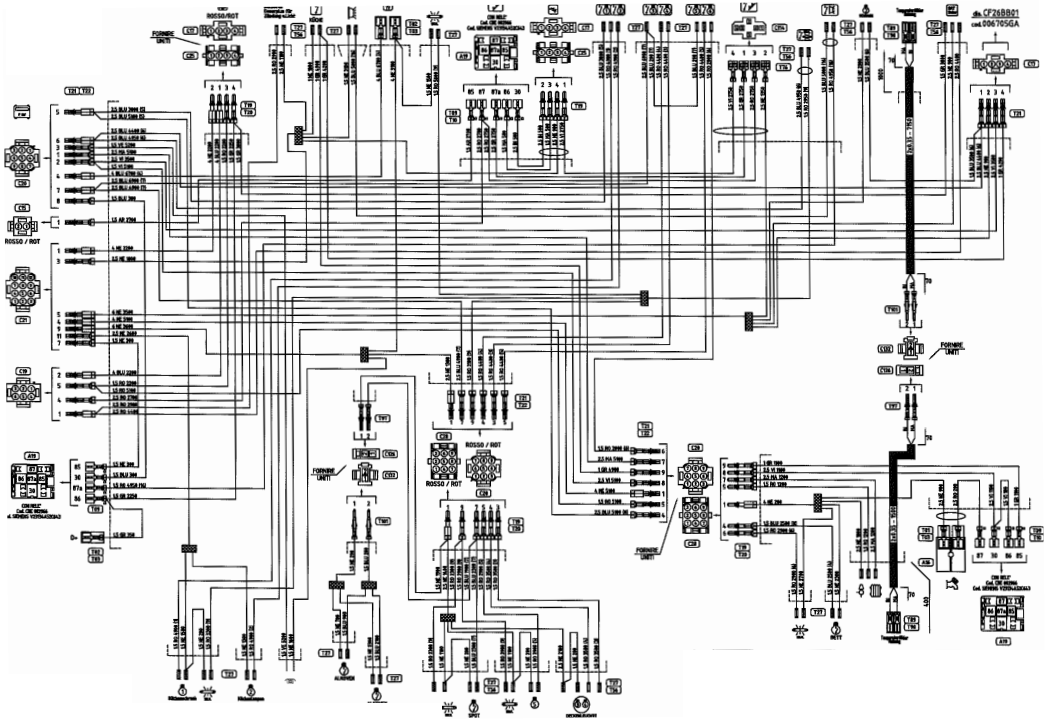

T600 FC

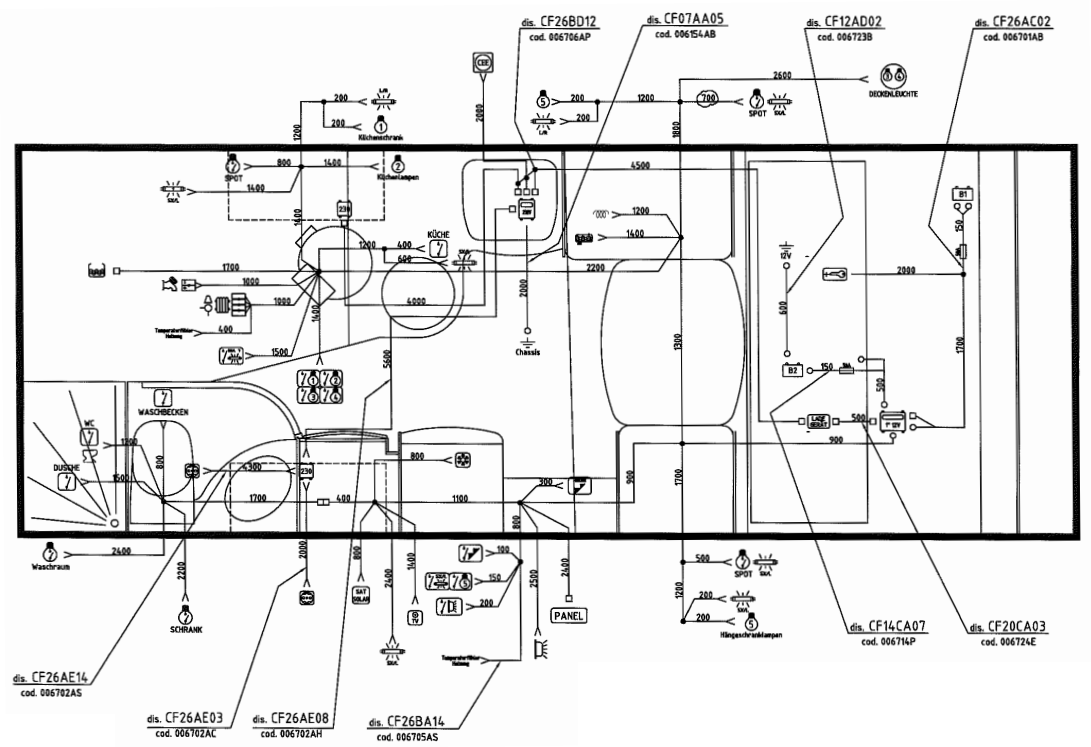
dis. CF26BD12
cod. 006706AP
dis. CF07AA05
cod. 006154AB
dis. CF12AD02
cod. 006723B
dis. CF26AC02
cod. 006701AB
DECKENLEUCHTE
Küchenschrank
Küchenlampen
SPOT
KÜCHE
Chassis
WASCHBECKEN
WC
DUSCHE
Waschraum
SCHRANK
PANEL
Hängeschranklampen
dis. CF14CA07
cod. 006714P
dis. CF20CA03
cod. 006724E
dis. CF26AE14
cod. 006702AS
dis. CF26AE03
cod. 006702AC
dis. CF26AE08
cod. 006702AH
dis. CF26BA14
cod. 006705AS

T600 FC

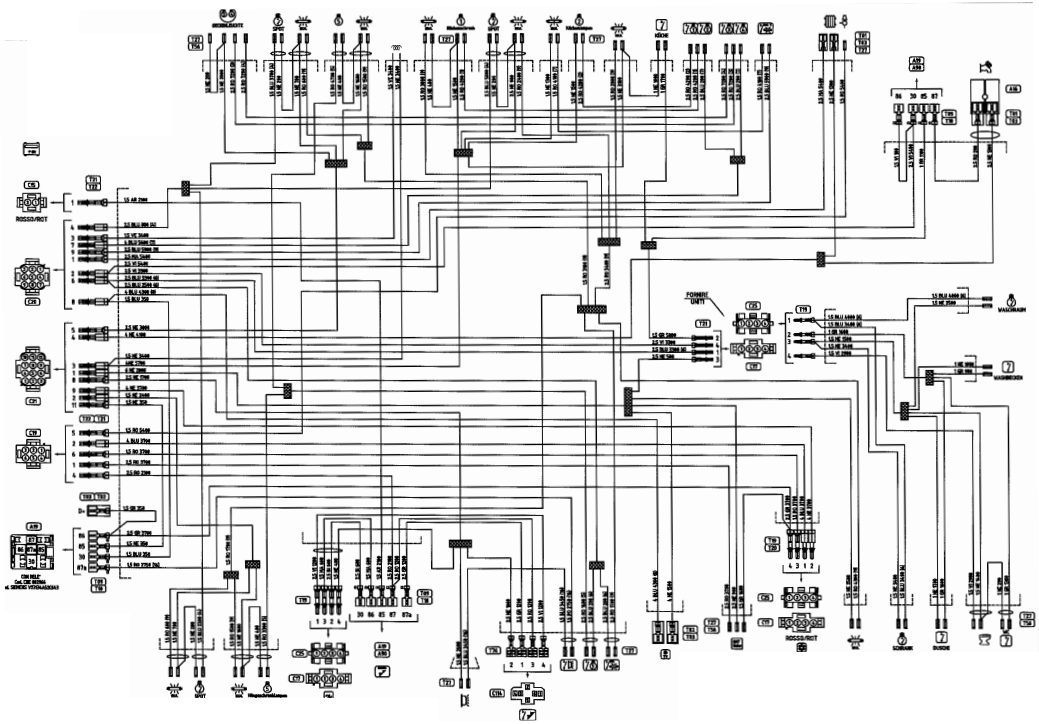

T600 GFLC-AK

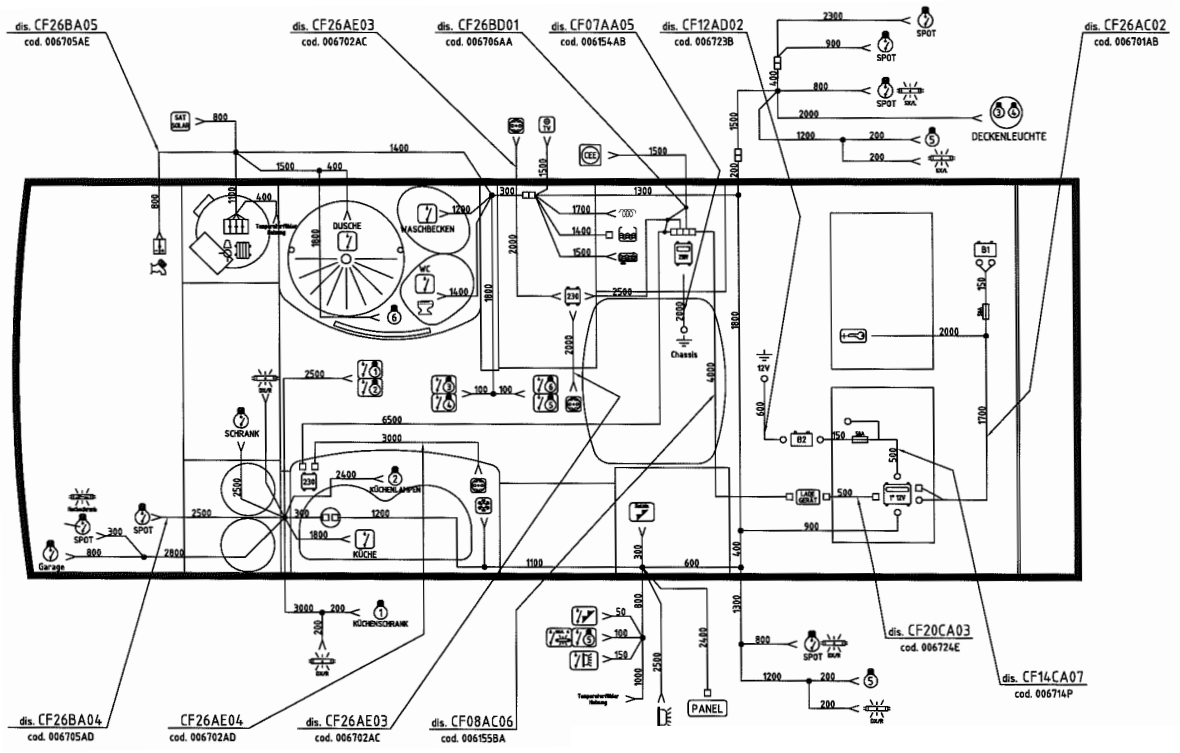
dis. CF26BA05
cod. 006705AE
dis. CF26AE03
cod. 006702AC
dis. CF26BD01
cod. 006706AA
dis. CF07AA05
cod. 006154AB
dis. CF12AD02
cod. 006723B
dis. CF26AC02
cod. 006701AB
DECKENLEUCHTE
DUSCHE
WASCHBECKEN
WC
Chassis
SCHRANK
KÜCHENLAMPEN
KÜCHE
KÜCHENSCHRANK
Garage
SPOT
PANEL
dis. CF20CA03
cod. 006724E
dis. CF14CA07
cod. 006714P
dis. CF26BA04
cod. 006705AD
CF26AE04
cod. 006702AD
dis. CF26AE03
cod. 006702AC
dis. CF08AC06
cod. 006155BA

T600 GFLC-AK

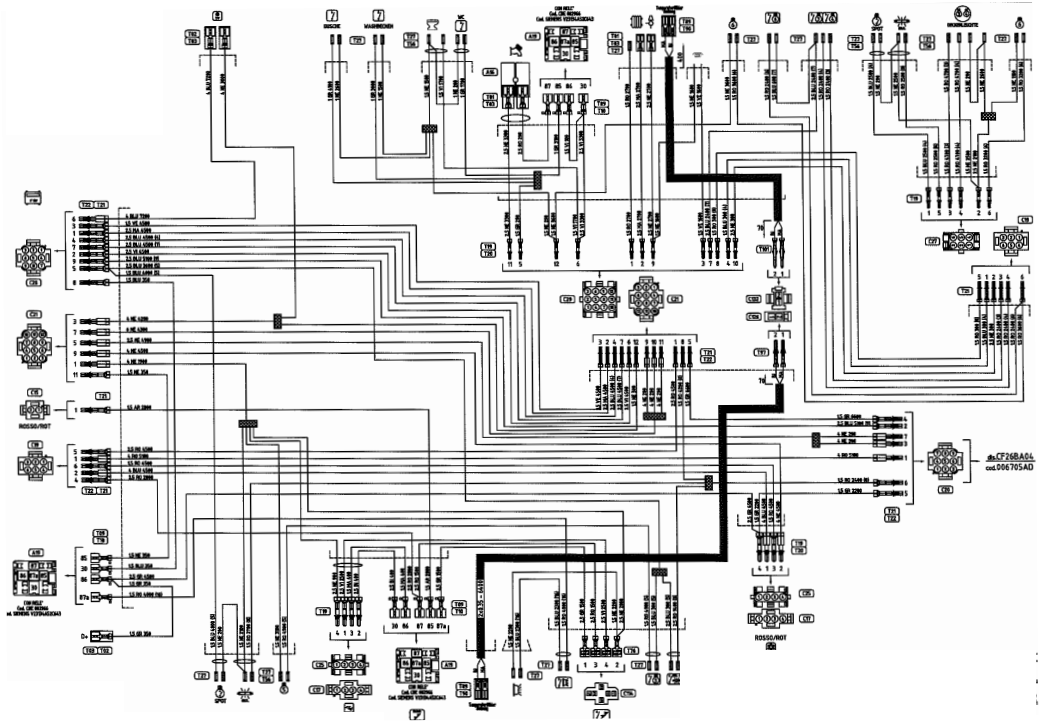

T600 GFS

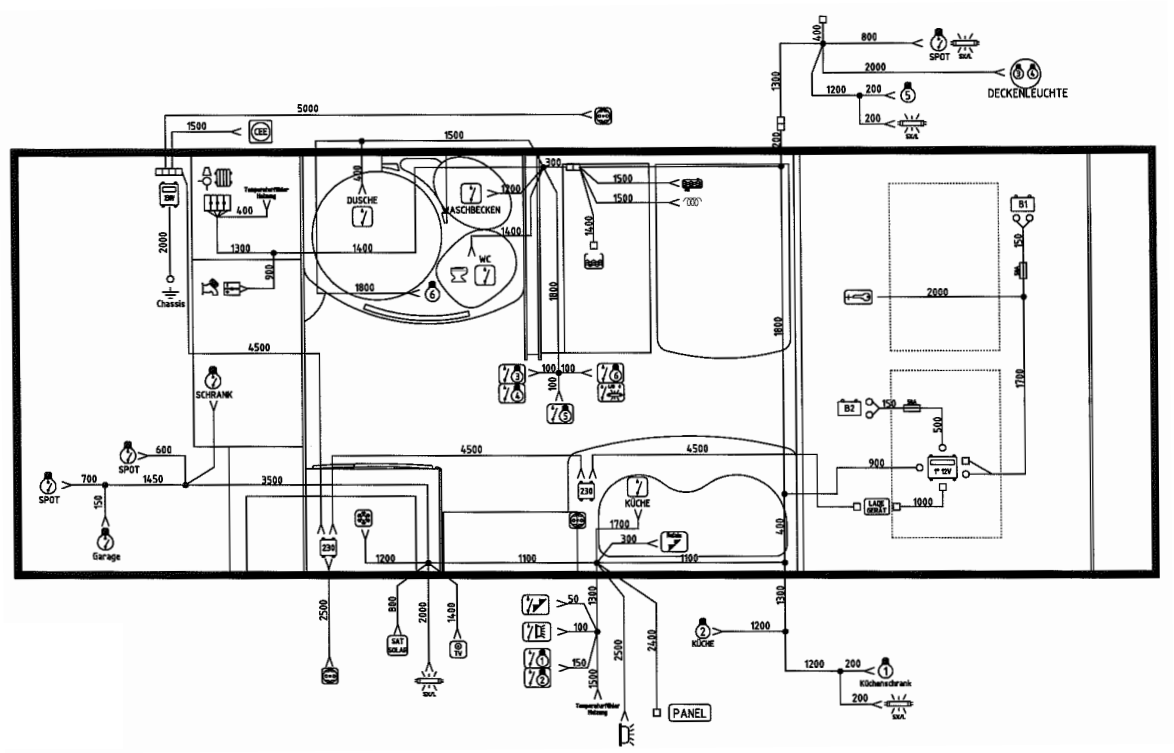

Hobby

T600 GFS

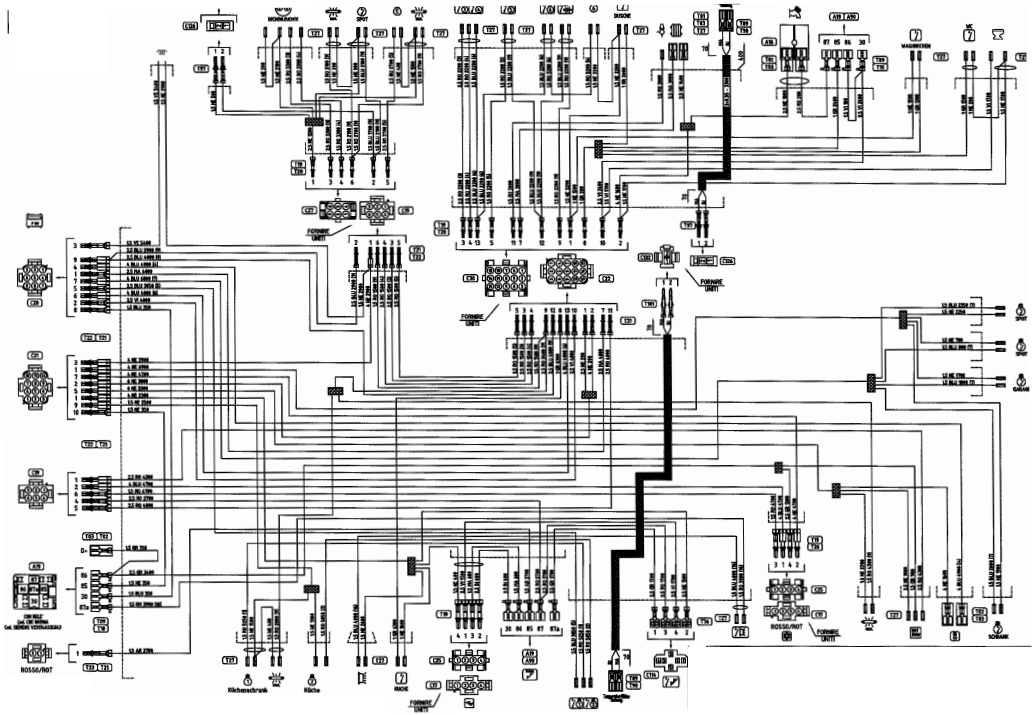

T650 AK-KLC

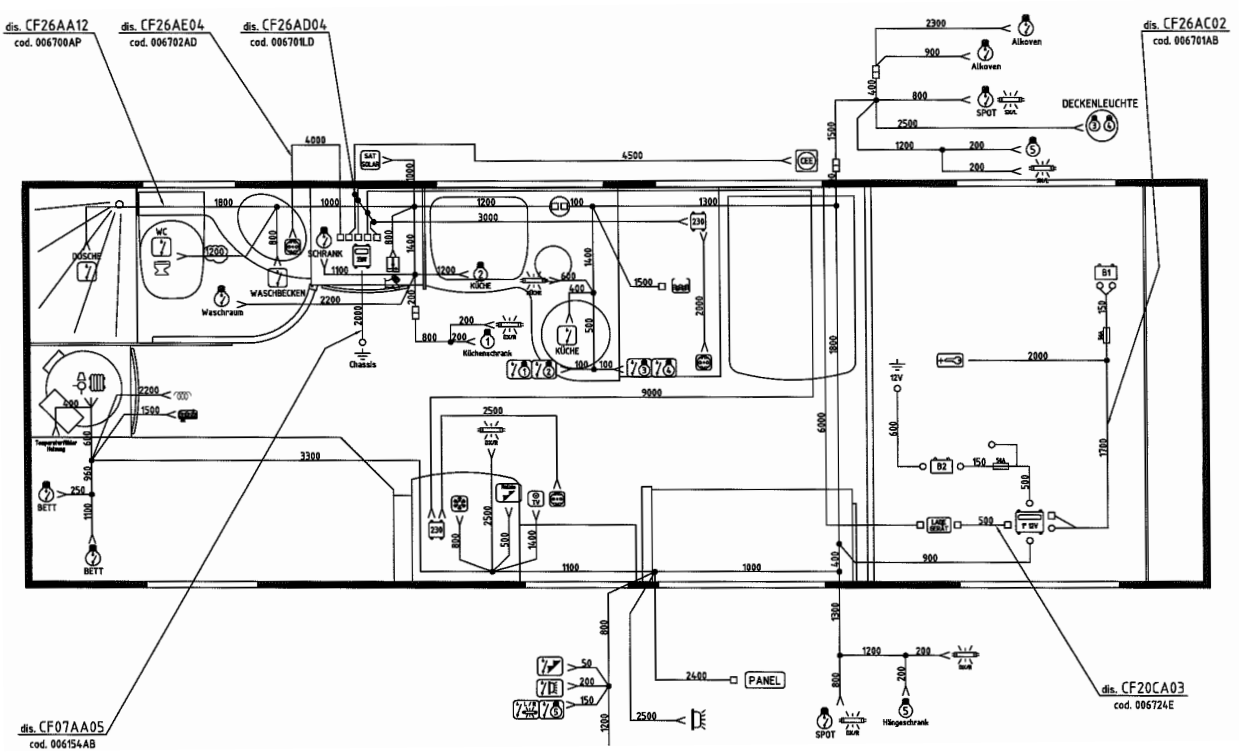
dis. CF26AA12
cod. 006700AP
dis. CF26AE04
cod. 006702AD
dis. CF26AD04
cod. 006701LD
dis. CF26AC02
cod. 006701AB
dis. CF07AA05
cod. 006154AB
dis. CF20CA03
cod. 006724E
Alkoven
SPOT
DECKENLEUCHTE
DOSCHE
WC
SCHRANK
WASCHBECKEN
Waschraum
KÜCHE
Kilchenschrank
Chassis
BETT
PANEL
Hängeschrank
12V
B1
B2

T650 AK-KLC

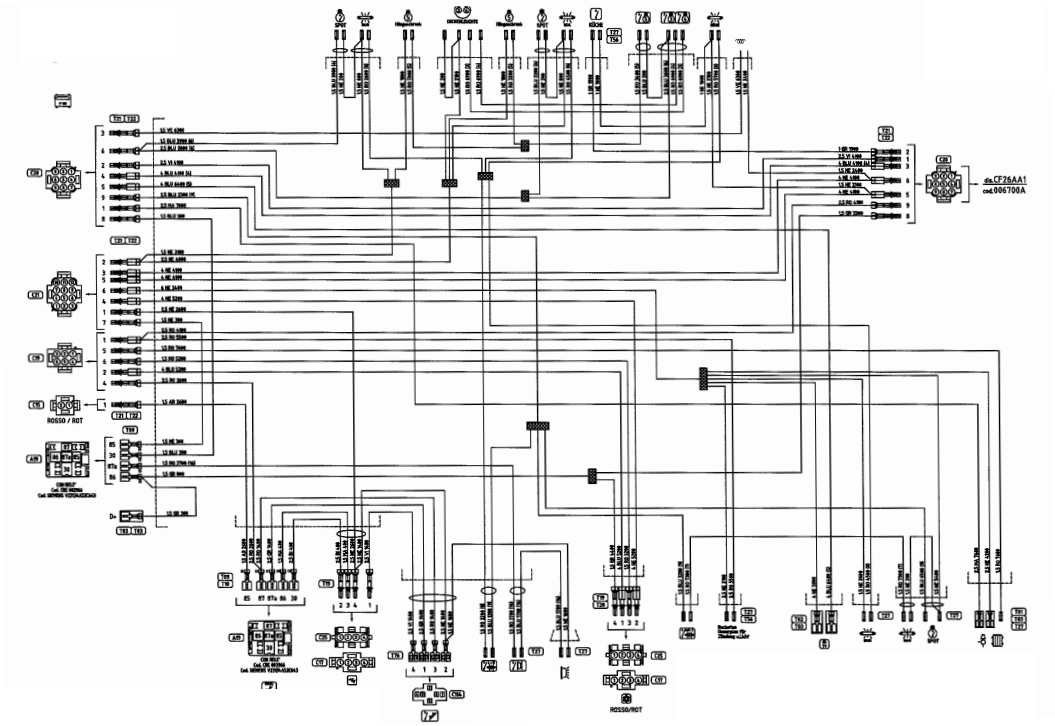

T650 FLC u. AK

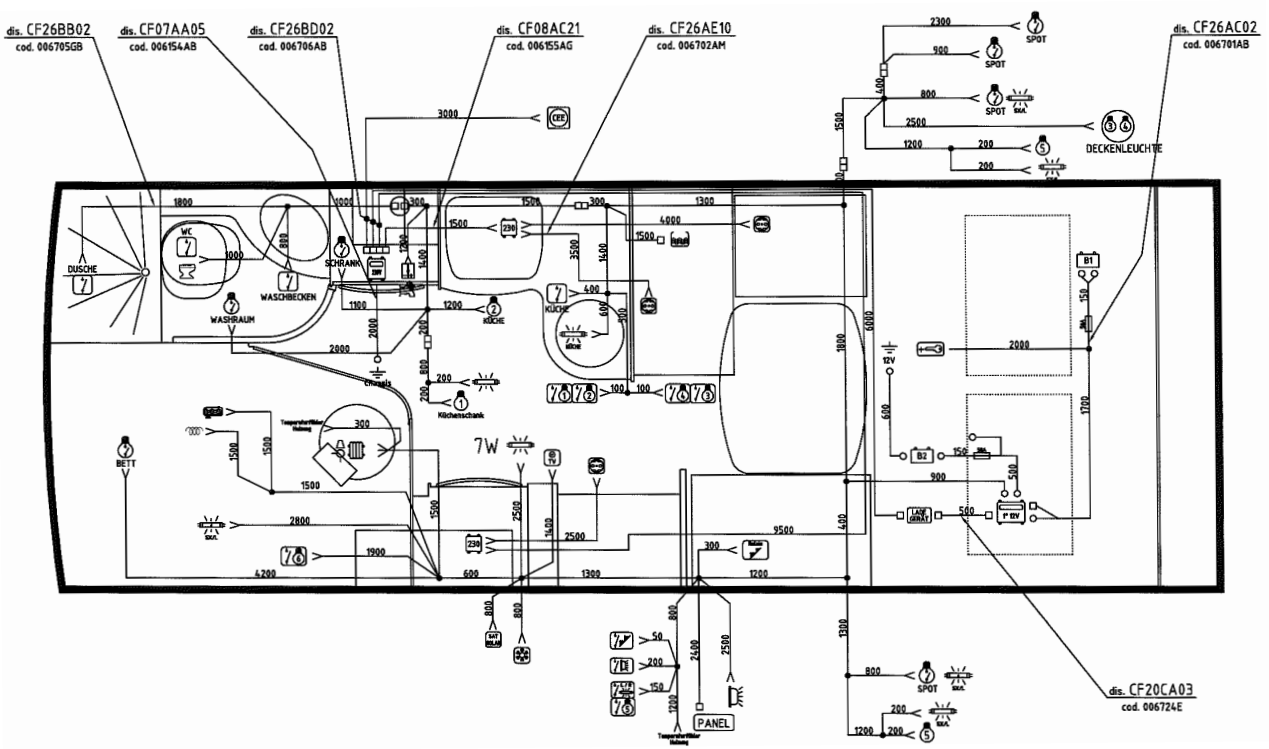
dis. CF26BB02
cod. 006705GB
dis. CF07AA05
cod. 006154AB
dis. CF26BD02
cod. 006706AB
dis. CF08AC21
cod. 006155AG
dis. CF26AE10
cod. 006702AM
dis. CF26AC02
cod. 006701AB
dis. CF20CA03
cod. 006724E
SPOT
DECKENLEUCHTE
DUSCHE
WC
WASCHBECKEN
WASHRAUM
SCHRANK
KÜCHE
Kühlschrank
Küchenschrank
BETT
7W
PANEL
BT
BZ
12V

T650 FLC u. AK

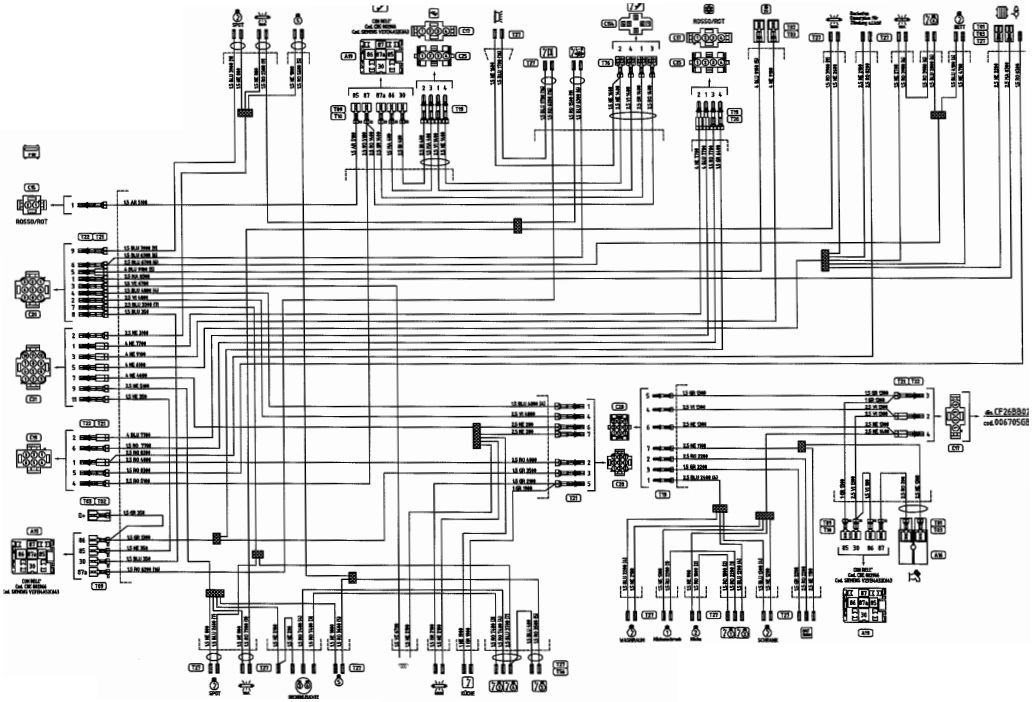

T650 GFLC u. AK

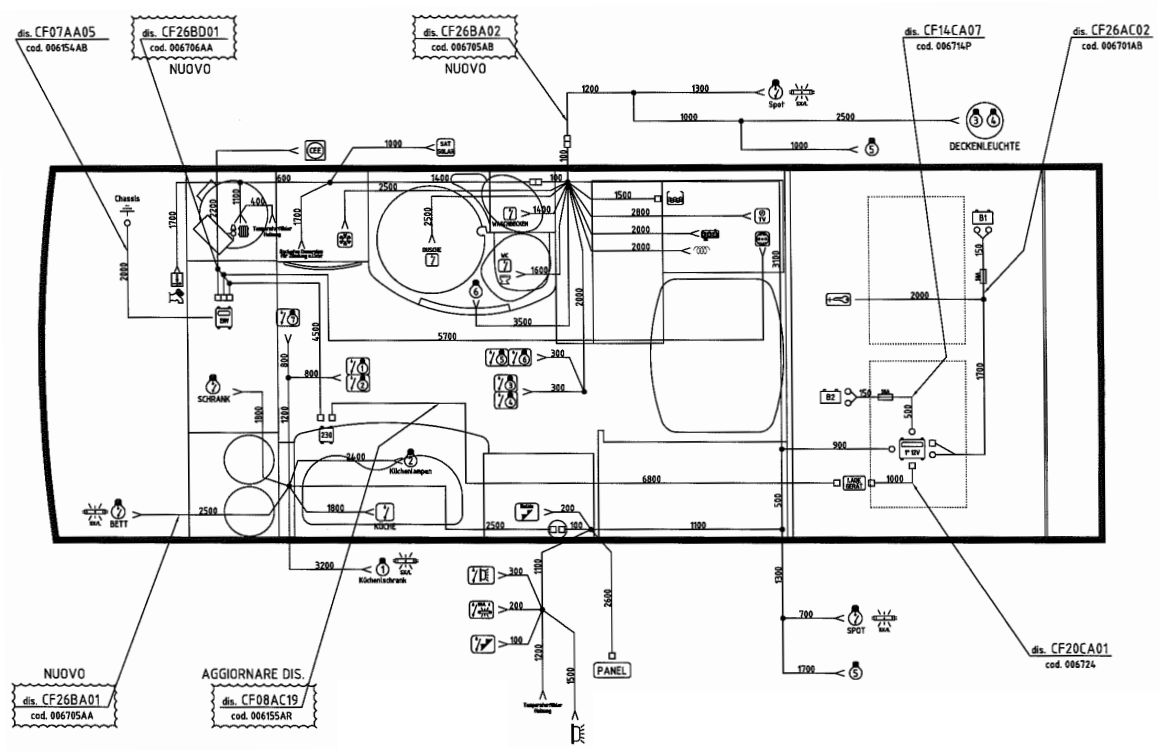

T650 GFLC u. AK

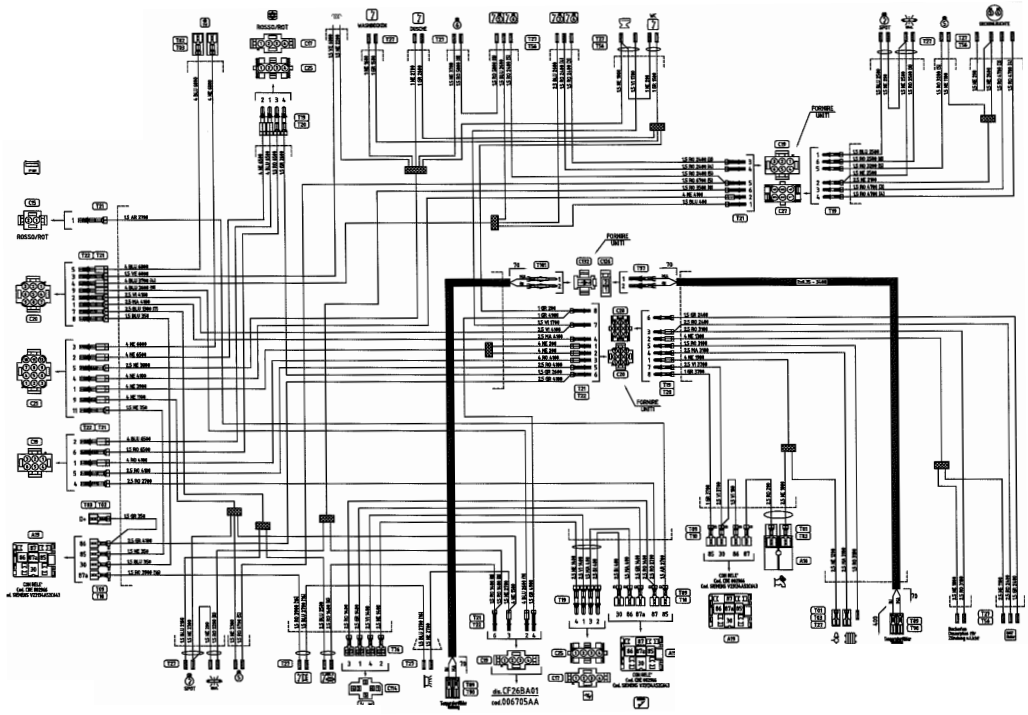

6.8 Subsequently installed devices

Subsequently installed electronic devices that can be used while driving (e.g. mobile phones, wireless equipment, radios, cameras for driving in reverse, navigation equipment, or others) must meet all of the requirements for electromagnetic compatibility. Such equipment must have been approved in accordance with EU Guideline 72/245/EWG as it appears in version 95/54/EG, because otherwise it may cause interference with the electronic systems already installed in the mobile home.

A CE mark is mandatory for devices that have been subsequently installed and which cannot be used while driving.

Chapter 6: Electrical Installations

6.1 Safety instructions

The following must be observed:

- Do not remove the signs on electrical components giving safety instructions or danger warnings.
- Do not use the installation compartments for the caravan battery, on-board control panel, battery charger and 230 V connector box as additional storage room.
- Smoking and open fire are forbidden when checking electrical equipment.
- Only authorised and experienced workshops may carry out electrical repairs.
- Inexpert handling of the vehicle‘s electrical system may endanger your own life as well as that of others.
- Use only weatherproof, 3-wired extension cable and shock-proof plug or CEE plug and coupler when hooking up to an external 230 V network.

6.2 HOBBY on-board control panel

The electric power supply is provided via the HOBBY on-board control panel in connection with an automatic battery charger.

Main elements of the electric system

- "PC-100HB and PC-100HB T" CONTROL PANEL - controls the electric power consumers,
- 12V DISTRIBUTON MODULE "DS-300HB" - main relay, battery parallel relay (12V - 70A), refrigerator relay, pump relay, charging facility B1, safety fuses.
- BATTERY LOADING DEVICE - loads the battery in buffer operation.
- PROBE WITH ROD - measures contents of fresh water tank, 4-state visualisation
- PROBE WITH SCREWS "SSP" - LED display shows when sewage tank is full
- CONSUMER BATTERY "B2" - supplies all consumers
- VEHICLE BATTERY "B1"
- GENERATOR - loads both the vehicle and consumer batteries at the same time
- 230V MAIN SWITCH - supplies and protects the 230V consumers
- 50A FUSES VEHICLE/ and CONSUMER BATTERIES

Advice and instructions

Important!

- Any changes to the electrical installation may only be carried out by a professional electrician.
- Disconnect the battery and switch off the 230V mains before carrying out any maintenance work.

Batteries

- Please observe the battery manufacturer's operating instructions.
- The acid in the battery is poisonous and corrosive. Avoid contact with eyes and skin.
- If the battery is completely empty, it must be recharged for a minimum of 10 hours. If the battery has been empty for at least 8 weeks, it may be damaged.
- Check the amount of liquid in the batteries (acid batteries) regularly; gel batteries require no maintenance, but must continuously be recharged.
- Check the level of the battery fluid regularly (lead storage battery).
- Check that the clamps are still on properly and remove any layers of oxide.
- Unclamp the minus pole if the battery is not being used for a longer period of time (more than 1-2 months).
- Should the consumer battery be removed, isolate the plus pole (to prevent short circuits when turning on the motor).
- If you are stopping in one place for a very long time, unclamp the battery or recharge it regularly.

Battery charger

- Install the battery charger in a dry and well-aired room.
- This device may only be mounted by a professional.
- In case of misuse, the guarantee and the manufacturer's liability will no longer apply.
- Do not carry out any maintenance work as along as the 230V mains is still connected.
- Never plug up the ventilation on the lid; ensure that there is sufficient ventilation.
- Turn off the switch before disconnecting the battery charger from the 230V mains.

Tank probes

- To avoid incrustations, especially in the sewage tank, never let the water in the tanks stand for too long.

230V main switch

- Before removing the lid, check that the plug for the electric mains has been unplugged.

- To avoid damage to the module, ensure that the plugs are plugged in firmly.
- To switch off the power supply for the entire system, set the main switch 230 to "0" (OFF).
- Connect and disconnect the system to the 230V external mains only when the main switch is off.
- Should the switch be automatically interrupted, check the system for defects before switching the power supply back on.

Fuses

- Only replace defect fuses after you have found the reason for the defect and fixed it.
- The new fuse must have the same amperage as the old one.

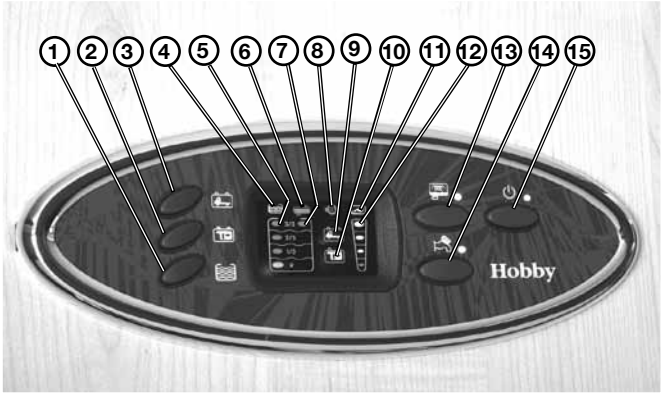

Siesta control panel

Description

1) Button for monitoring fresh water tank.
2) Button for monitoring consumer battery (B2).
3) Button for monitoring vehicle battery (B1).
4) LED signals test in fresh water tank; blinking signals empty tank.
5) LEDs signal level of fresh water tank.
6) LED signals test in sewage tank; blinking signals full tank.
7) Blinking LED signals full sewage tank; LED 6 also signals alarm.

8) Signals that generator is charging vehicle and consumer batteries.
9) LED signals test of vehicle battery; blinking signals empty battery.
10) LED signals test of consumer battery; blinking signals empty battery.
11) LED signals that 230V mains is connected.
12) LED voltmeter for monitoring voltage of vehicle and consumer batteries.
13) Control switch for sewage tank resistance; dependent on main switch and functions when motor is switched on or 230V mains is connected.
14) Switch for water pump that operates pump relay; dependent on main switch.
15) Main switch for consumers; blinking LED signals that consumer battery is almost empty and protection against total discharge will soon be activated.

Functions

Protection against total discharge

An electronic installation turns off all 12V consumers when the consumer battery reaches a minimum voltage of 10V. The consumers can be switched on again for approx. one minute by switching the main switch on again.

The refrigerator, electric entrance step and those consumers directly supplied by B2 are not affected by this installation.

12 V - Distribution panel

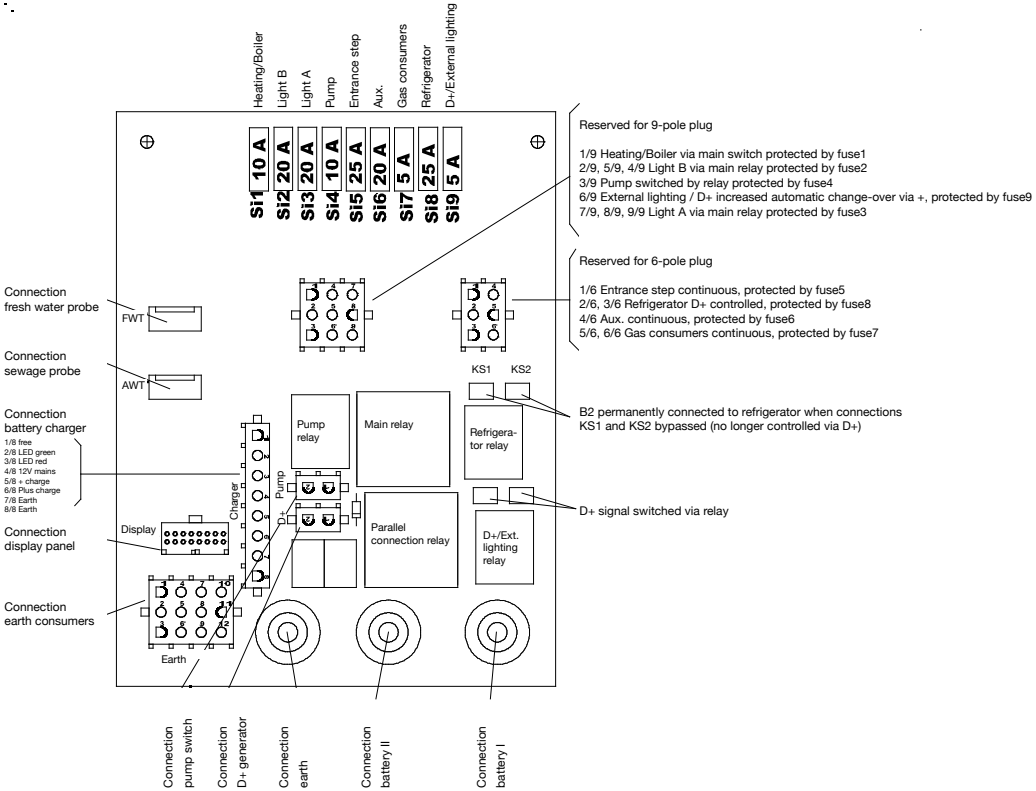

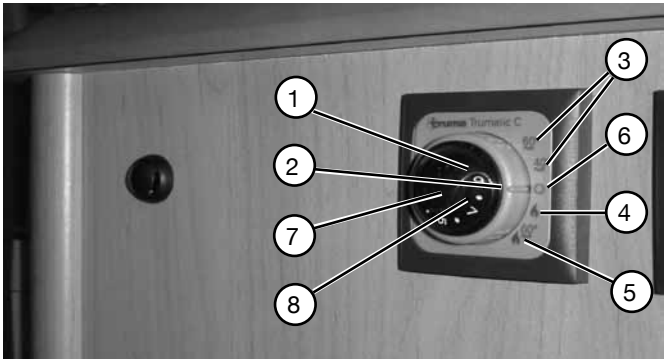

Gas operation (heating and warm water)

- Dial for room temperature (1)
- green “operating“ control light (2)
- summer operation (water temperature 40°C or 60°C (3)
- winter operation (heating without need for warm water) (4)
- winter operation (heating with need for warm water) (5)
- rotary switch “off“ (6)
- yellow control light: “boiler in heating phase“ (7)
- red control light: “malfunction“ (8)

For further information, please refer to the enclosed TRUMA operating manual.

6.3 Electric power supply

Your mobile home has the following connections for electric power supply:

- electric mains (a.c. voltage 230 V)
- caravan battery (d.c. voltage 12 V)

Electric power supply from the electric mains

The 230 V system is protected by a 2-pole circuit breaker with 16 A. The circuit breaker is located behind the driver‘s seat. Should there be a malfunction, the passenger circuit breaker opens the entire 230 V circuit. In most cases, such a malfunction is caused by a defect piece of electric equipment or a defect in its supply line.

- Repair the defect before switching the circuit breaker on again.
- If the defect cannot be repaired, consult an experienced electrician.

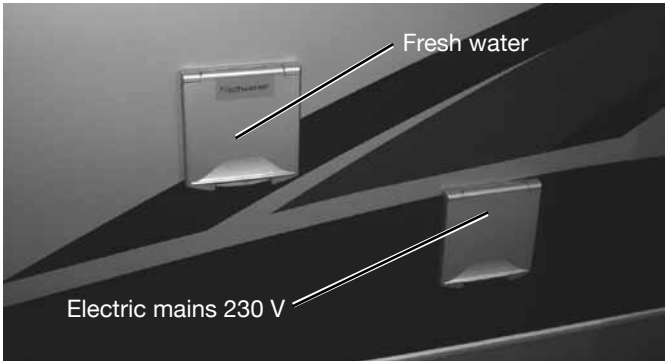

The following applies for the electric mains:

- the power supply lead may not be longer than 25 m.

> If you are using a cable drum without protection against overheating, the electric cable must be completely unwound from the cable drum.

- Use only plugs and cables that meet CEE standards.
- First, make the connection to the main socket (1) of the vehicle.
- Then insert the other plug in the live socket.
- Follow this sequence in reverse when you pull out the plug.

6.4 Function of the power generating unit

Position of the battery charger

The battery charger is located in the driver's seat.

Operating with 230 V electric mains

After switching on the master switch on the HOBBY on-board control panel, the caravan battery will be charged by the battery charger in the mobile home.

Charging procedure

The charging procedure is dependent on the battery voltage of the caravan battery:

- Charge until the battery voltage has reached 14.4 V.
- Switch off the battery charger until the battery voltage has sunk to 13.8 V.
- Recharge when the battery voltage sinks below 13.8 V.
- Make a parallel connection and charge the engine battery as well as the caravan battery when the battery voltage sinks below 13.5 V.
- Separate the engine battery and the caravan battery when the joint battery voltage sinks below 12.5 V.

The battery voltage of both the engine battery and the caravan battery can be checked continuously on the on-board control panel located above the entrance door.

The battery charger only works if the batteries have been inserted with their poles in the right direction.

A discharged caravan requires a charging period of approx. 12 hours on the electric mains to completely recharge itself. This charging period must be extended accordingly if equipment that uses 12 V is switched on at the same time.

Protection against total discharge

If the battery voltage of the caravan battery sinks below 10.5 V, a relay shuts down all the equipment that uses voltage.

If the protection against total discharge takes effect, turn off the 12 V master switch to avoid an additional discharge of the caravan battery.

Function of the battery charger

Protecting the device

If the battery charger should become hot because of high environmental temperatures or high charging currents, a built-in thermal switch turns off the battery charger until the temperature in the battery charger has dropped again.

Checklist

- Turn off the motor.
- Turn off the mains switch on the battery charger.
- Connect the battery charger to the mains supply.
- Switch on the 12 V master switch.
- Turn off all equipment (except refrigerator) that uses 12 V.
- Turn on the mains switch on the battery charger.

The voltage of the caravan battery must rise to a maximum voltage of 14.4 V.

If this does not happen after using the built-in battery charger to charge the battery, check the following:

- Has the battery charger been properly attached to the network?
- Is the mains fuse of the battery charger functioning properly?

- Is the battery voltage of the battery charger above 1 volt?
- Have the poles of the caravan battery been attached properly?
- Is the connection between the battery charger and the on-board control panel functioning properly?

Operation when the motor is running

As soon as the motor is running, a relay connects the starter battery and the caravan battery in parallel. The D+ signal sits close to the dynamo. Therefore, the dynamo charges both batteries. If the D+ signal no longer sits close to the dynamo, the two batteries will be separated from each other again. In this way, the starter battery cannot be discharged by equipment in the caravan.

The 12 V supply for the refrigerator only functions when you are driving. If the motor has stopped, the 12 V operation of the refrigerator is automatically turned off again.

> To charge a discharged caravan battery optimally while driving, disconnect the 12 V operation of the refrigerator and turn off as much equipment as possible that uses 12 V.

Checklist

- Turn off the motor.
- Switch on the 12 V master switch.
- Turn off all equipment that uses 12 V.
- Start the motor.

The voltage of the caravan battery must rise if

- the engine speed is above the idling speed,
- the vehicle‘s battery is not completely discharged.

If this does not happen after using the dynamo to charge the battery, check the following:

- Is the fuse in the supply line to the vehicle‘s battery functioning properly near the vehicle‘s battery?
- Have the poles of the caravan battery been attached properly to the battery charger?
- Is the fuse in the supply line to the “D+“ signal functioning properly near the vehicle‘s battery?
- Is the “D+“ signal sitting close to the battery charger? There must be a voltage of 12 V here when the motor is running.
- Is the connection between the battery charger and the on-board control panel functioning properly?

Operation by means of a 12 V caravan battery

All of the equipment is automatically supplied from the caravan battery if the mobile home is standing still without a 230 V mains supply and with its engine turned off. The 12 V master switch must be switched on.

The caravan battery should only be allowed to discharge to a voltage of 11 V. At this point, you should ensure that it is recharged from the dynamo or from public supply.

6.5 Caravan battery

Location

- Under the driver's seat, in the double bottom or in a separate compartment that is externally accessible, depending on the floor plan.

Features

- The battery does not require maintenance. It does not need to be refilled with water.
- The battery is closed off and cannot leak.
- The battery is cycle-proof, making it especially suitable for the supply of the board network. Several discharging/ charging operations are possible.

Use only the same kind of batteries when exchanging the battery (same capacity and voltage, cycle-proof, maintenance-free and leakproof).

Changing the battery

- Please do not smoke when changing the battery.
- Disconnect the connection to the 230 V network.
- First, disconnect the minus (-) connector.
- Then disconnect the plus (+) connector.
- Remove the battery.
- Insert the new battery.
- Use the reverse sequence to connect the new battery.

The solution of electrolytes contained in the battery is poisonous and corrosive! Protect your eyes and face whenever handling the battery.

If your skin or eyes come into contact with this solution, wash immediately with lots of clear water.

Keep open flames or equipment that gives off sparks away from the battery. Danger! Explosive!

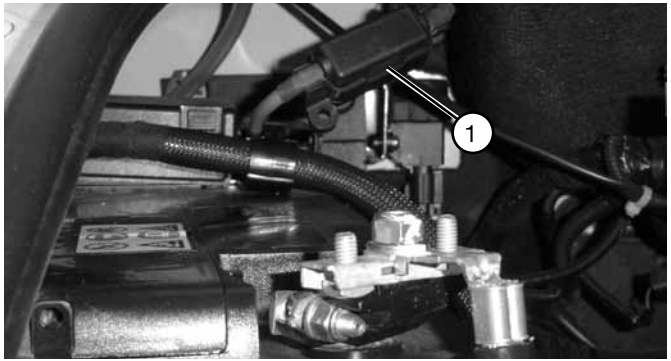

6.6 Fuse protection of the electric system

Starter battery

The main fuse protection is carried out by a 40 A safety fuse (1). The fuse is located under the hood next to the starter battery.

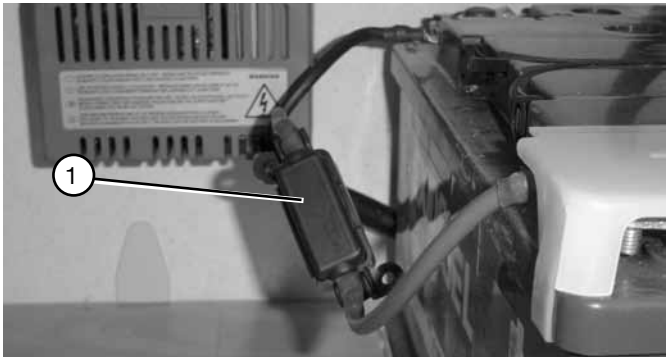

Caravan battery

The main fuse protection is carried out by a 30 A safety fuse (1). The fuse is located right next to the battery.

12 V circuits

These are protected by overload releases on the HOBBY control panel.

Information on fuses

15 A: refrigerator
10 A: light
10 A: pump, boiler, heating, TV

The following applies if one of the devices breaks down:

- Check the fuse on the corresponding electric circuit.
- Press the operating button.
- If the fuse goes off again, please speak to your authorised Hobby dealer.

Charger with fuse box

- The charger with separate fuse box is located under the passenger seat.

6.7 Interior circuit diagram

T555 AK-LC/T555 AK-SC

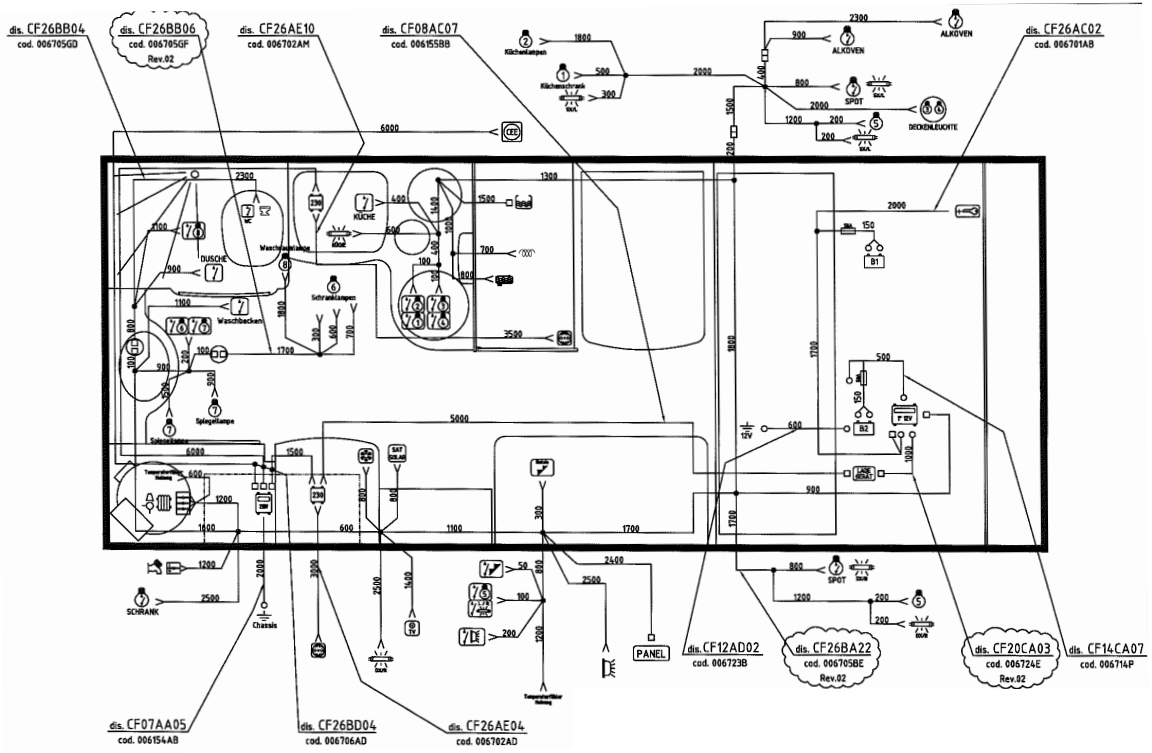

T555 AK-LC/ T555 AK-SC

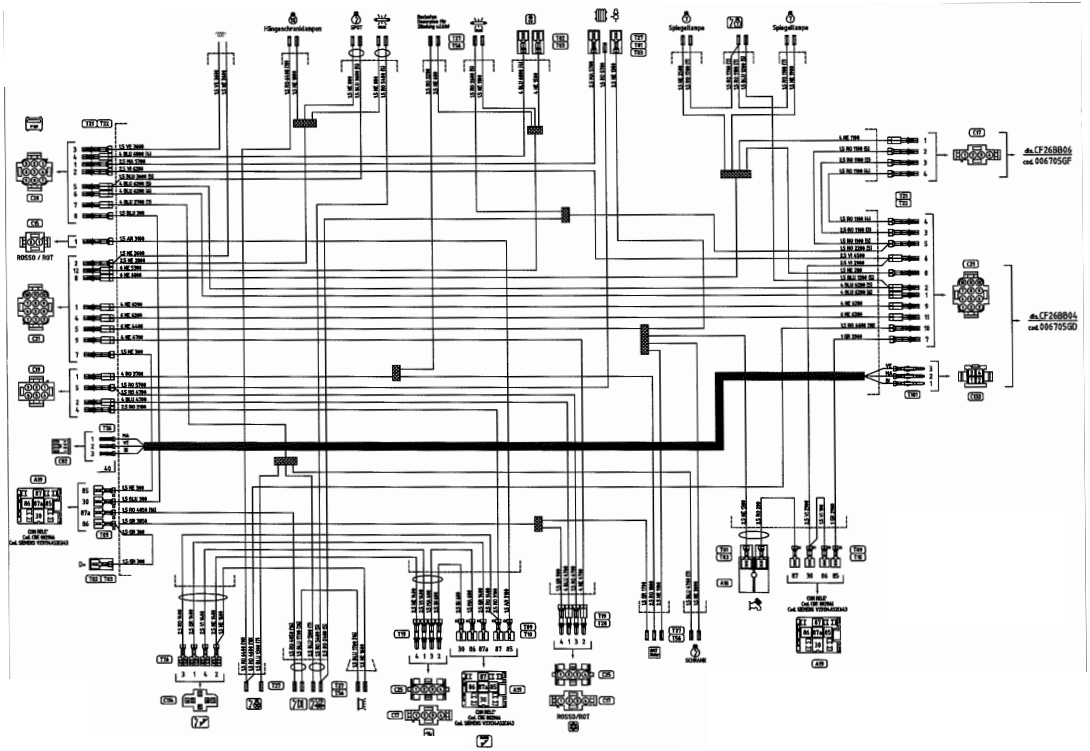

T555 FS u. AK

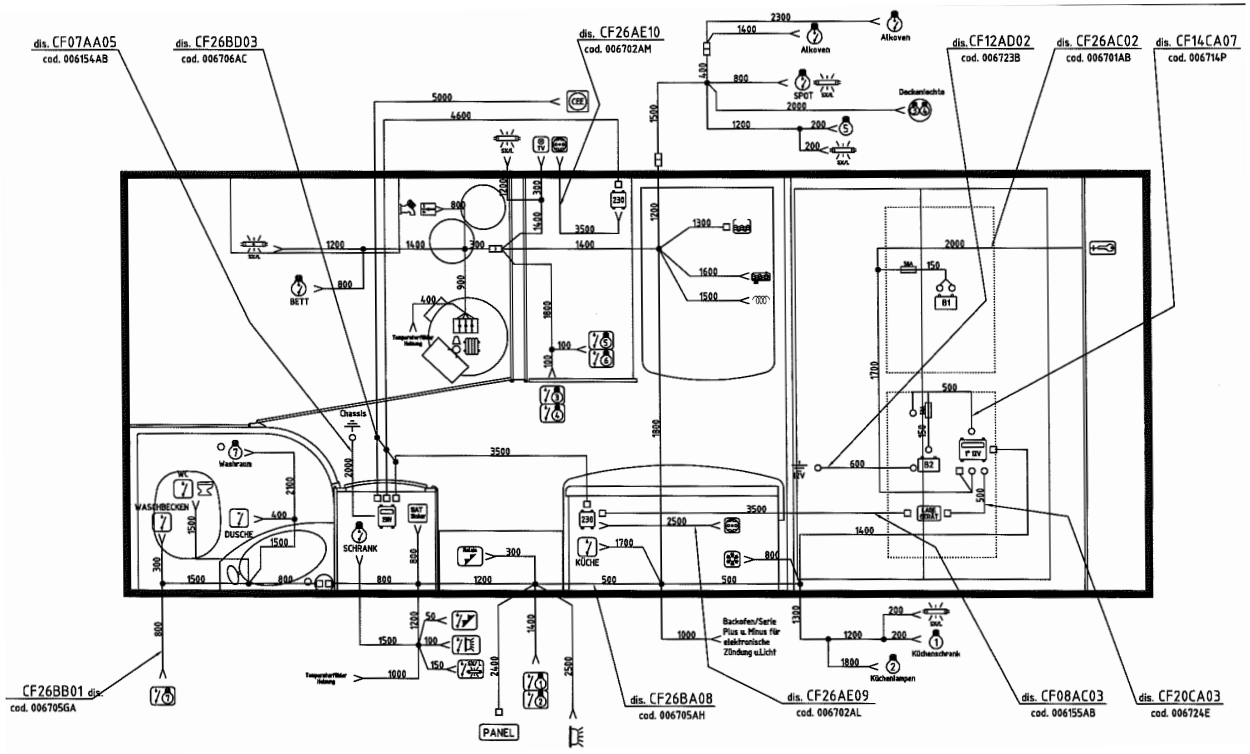
dis. CF07AA05
cod. 006154AB
dis. CF26BD03
cod. 006706AC
dis. CF26AE10
cod. 006702AM
dis. CF12AD02
cod. 006723B
dis. CF26AC02
cod. 006701AB
dis. CF14CA07
cod. 006714P
Alkoven
Alkoven
SPOT
Deckenleichte
BETT
Chassis
Waschraum
WASCHBECKEN
DUSCHE
SCHRANK
KÜCHE
Backofen/Serie Plus u. Minus für elektronische Zündung u.Licht
Küchenschrank
Küchenlampen
CF26BB01 dis.
cod. 006705GA
dis. CF26BA08
cod. 006705AH
dis. CF26AE09
cod. 006702AL
dis. CF08AC03
cod. 006155AB
dis. CF20CA03
cod. 006724E
PANEL

T555 FS u. AK

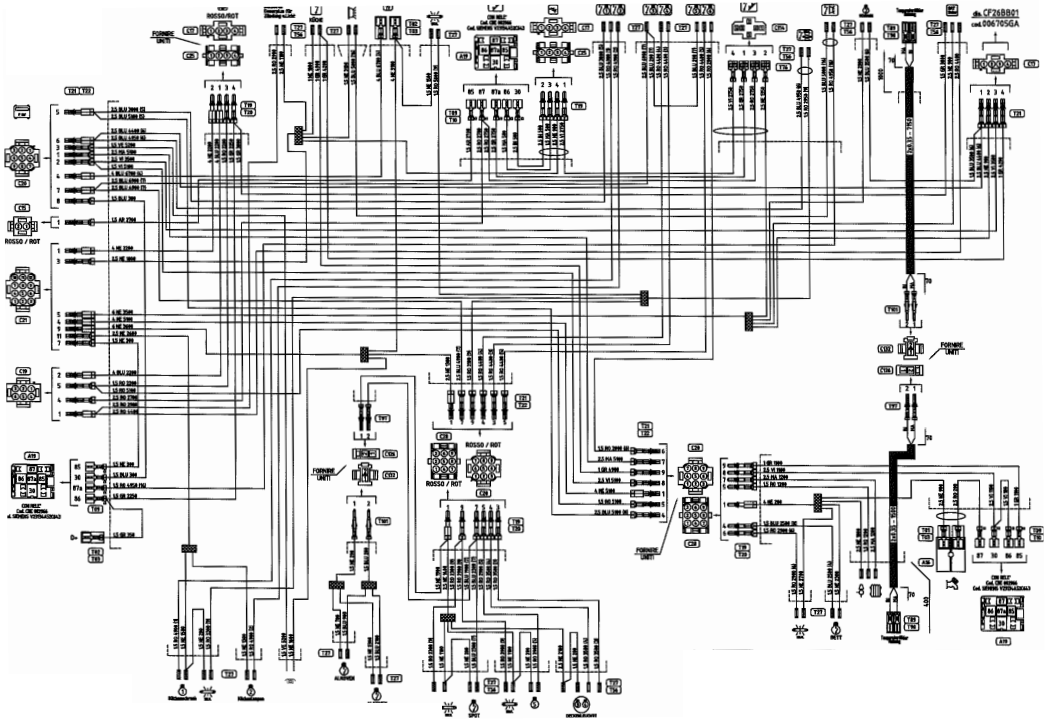

T600 FC

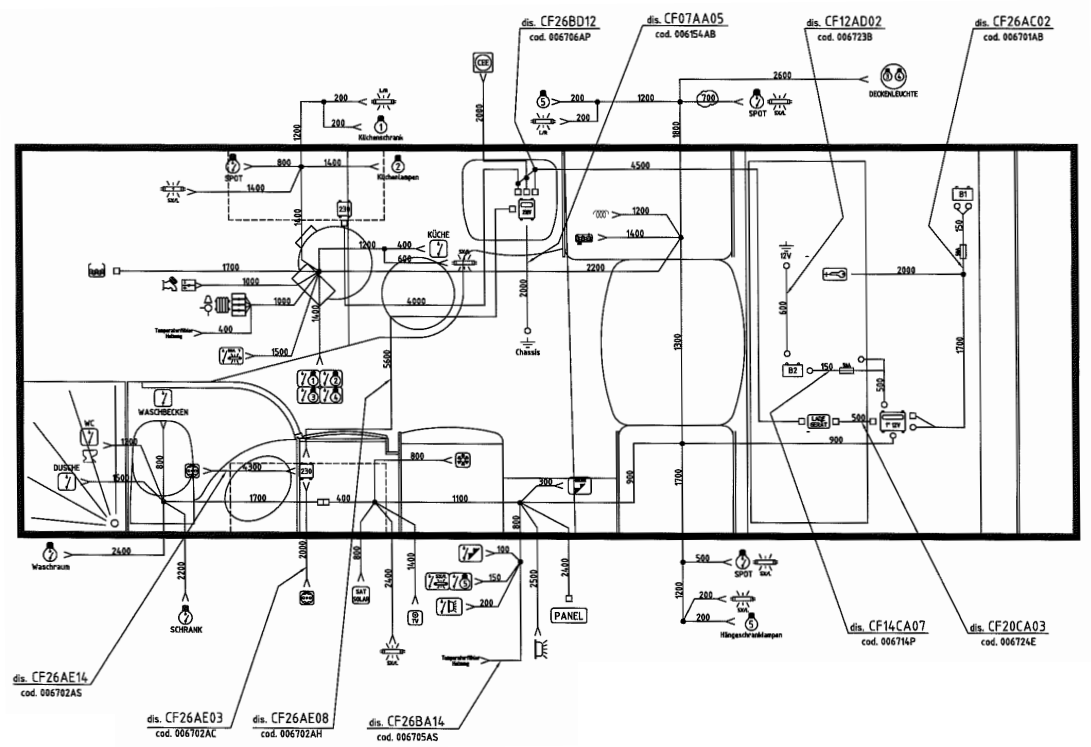
dis. CF26BD12
cod. 006706AP
dis. CF07AA05
cod. 006154AB
dis. CF12AD02
cod. 006723B
dis. CF26AC02
cod. 006701AB
DECKENLEUCHTE
Küchenschrank
Küchenlampen
SPOT
KÜCHE
Chassis
WASCHBECKEN
WC
DUSCHE
Waschraum
SCHRANK
PANEL
Hängeschranklampen
dis. CF14CA07
cod. 006714P
dis. CF20CA03
cod. 006724E
dis. CF26AE14
cod. 006702AS
dis. CF26AE03
cod. 006702AC
dis. CF26AE08
cod. 006702AH
dis. CF26BA14
cod. 006705AS

T600 FC

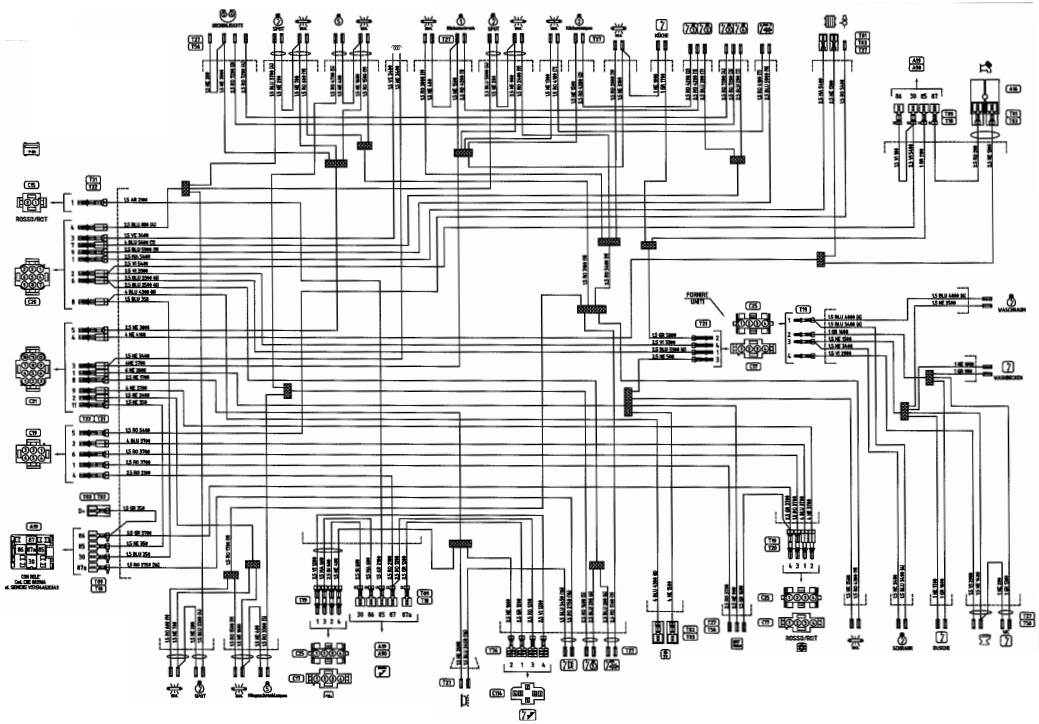

T600 GFLC-AK

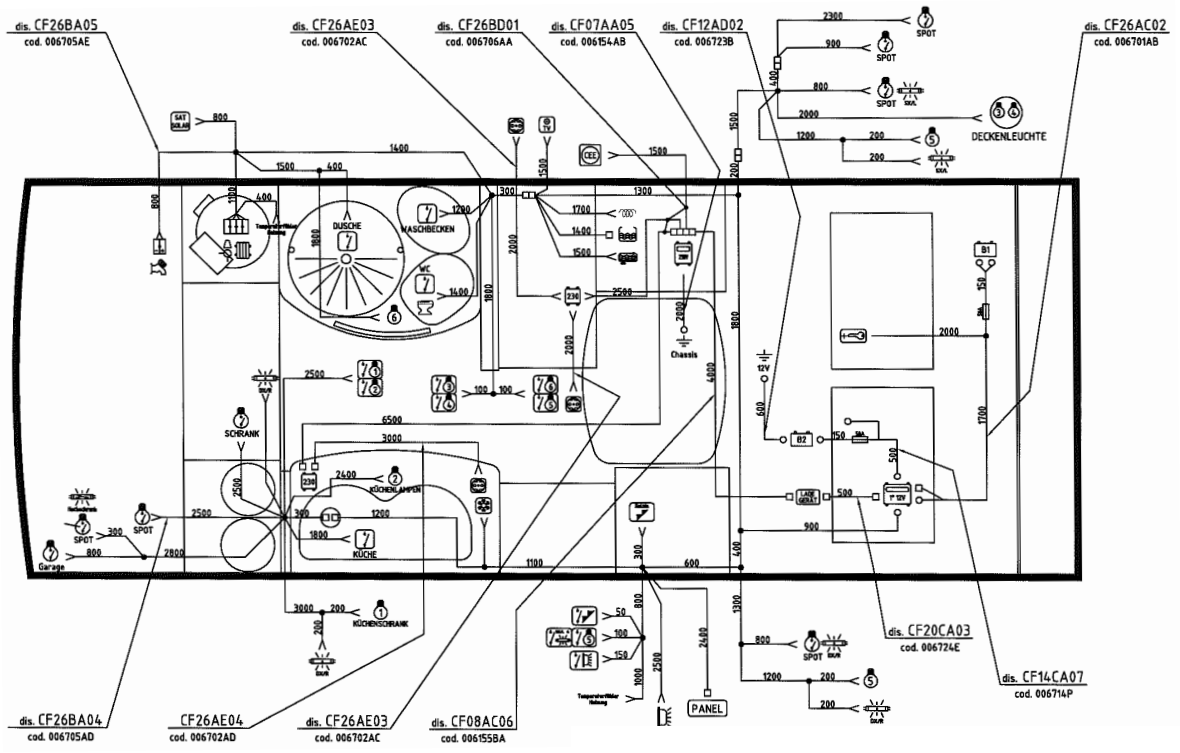
dis. CF26BA05
cod. 006705AE
dis. CF26AE03
cod. 006702AC
dis. CF26BD01
cod. 006706AA
dis. CF07AA05
cod. 006154AB
dis. CF12AD02
cod. 006723B
dis. CF26AC02
cod. 006701AB
DECKENLEUCHTE
DUSCHE
WASCHBECKEN
WC
Chassis
SCHRANK
KÜCHENLAMPEN
KÜCHE
KÜCHENSCHRANK
Garage
SPOT
PANEL
dis. CF20CA03
cod. 006724E
dis. CF14CA07
cod. 006714P
dis. CF26BA04
cod. 006705AD
CF26AE04
cod. 006702AD
dis. CF26AE03
cod. 006702AC
dis. CF08AC06
cod. 006155BA

T600 GFLC-AK

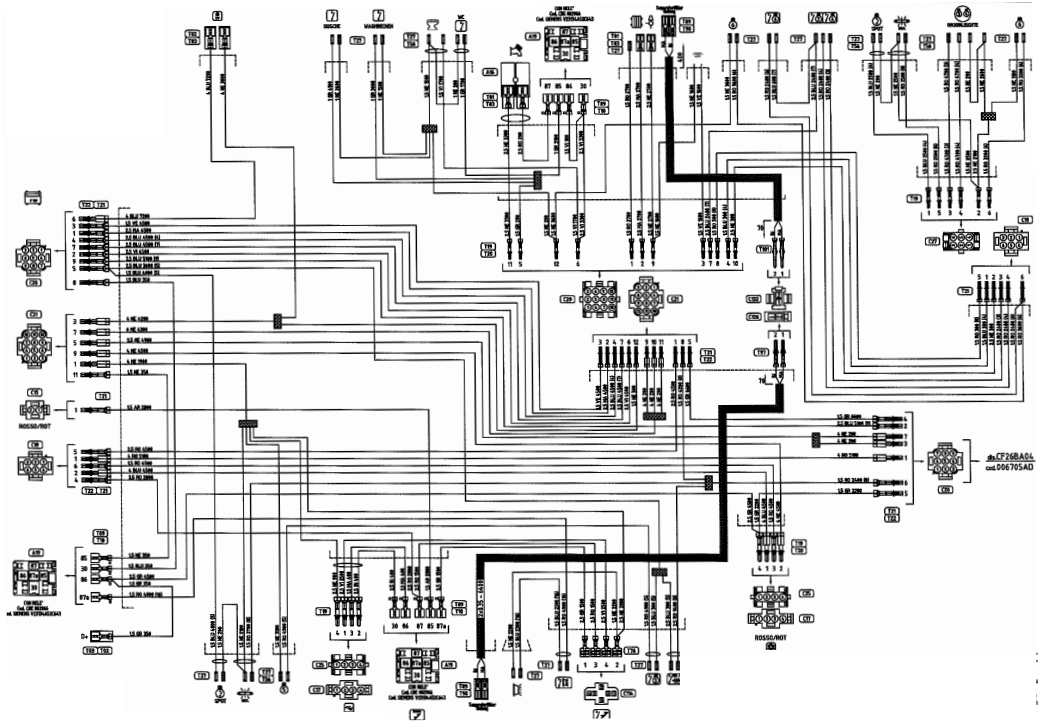

T600 GFS

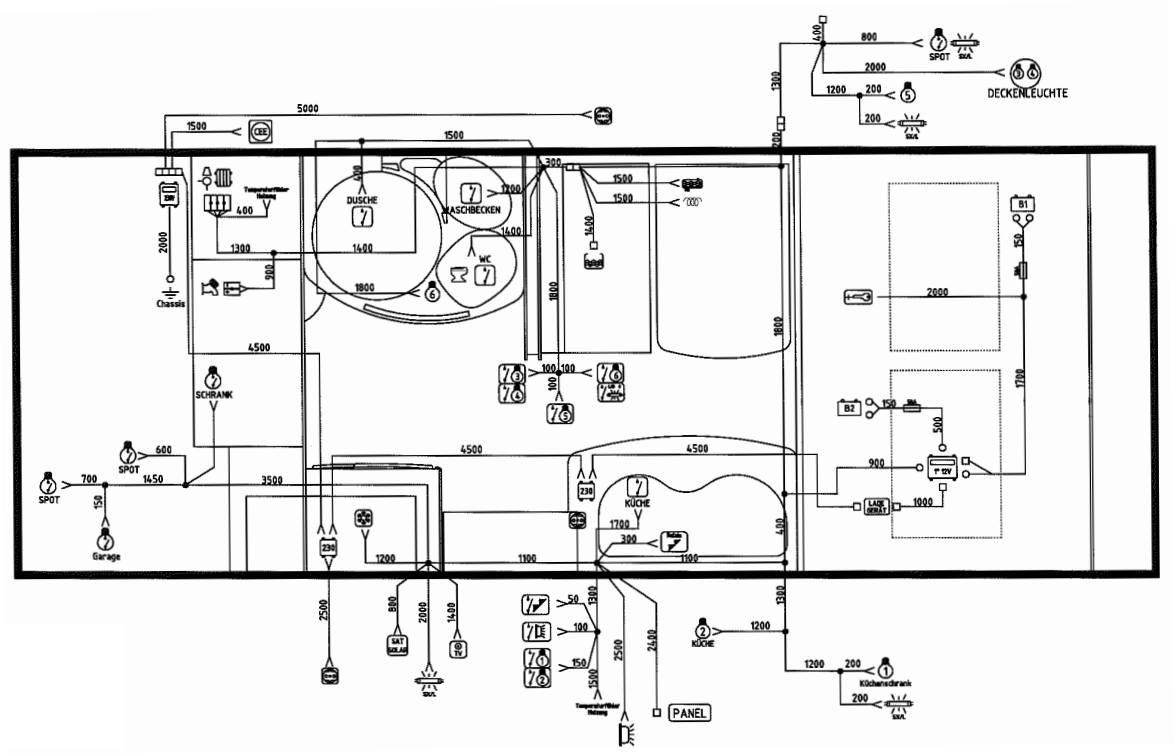

Hobby

T600 GFS

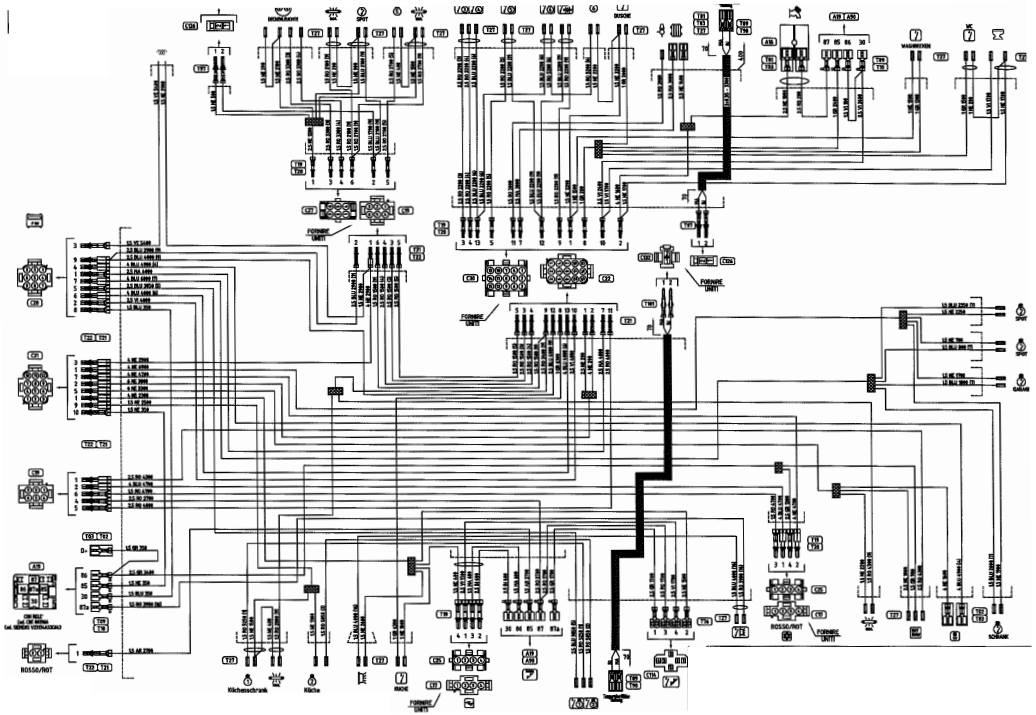

T650 AK-KLC

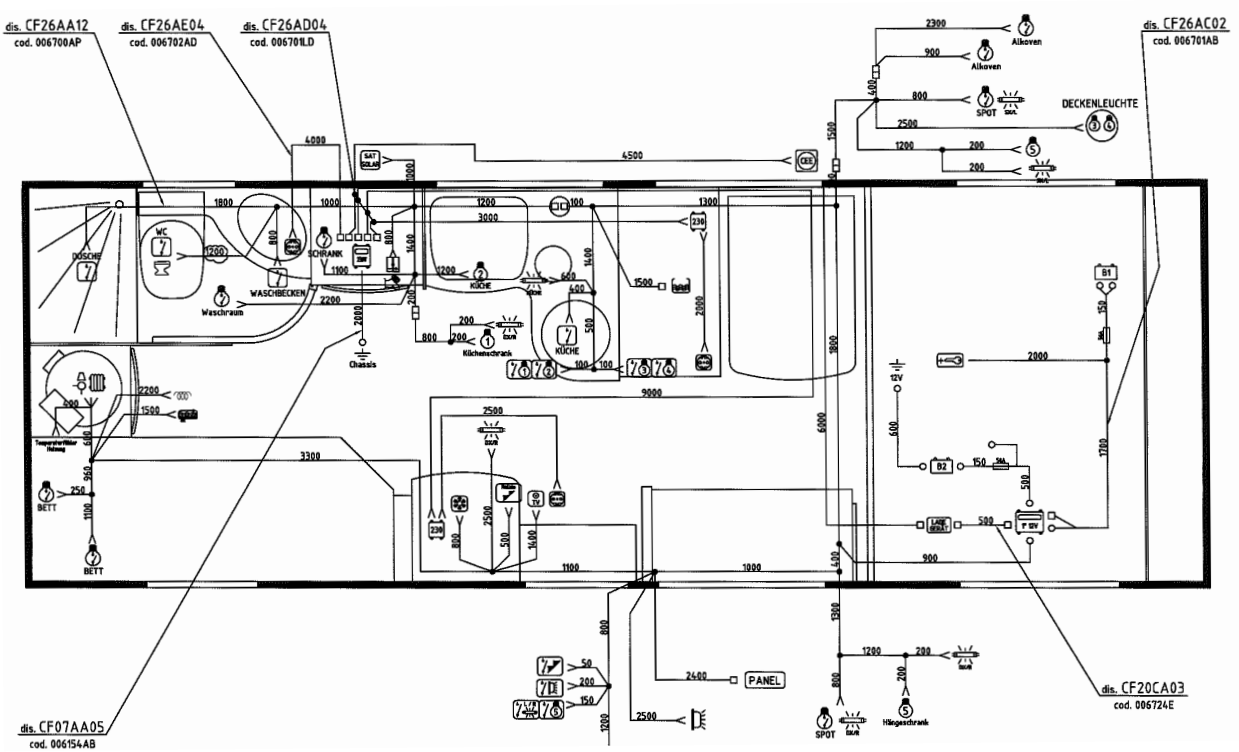
dis. CF26AA12
cod. 006700AP
dis. CF26AE04
cod. 006702AD
dis. CF26AD04
cod. 006701LD
dis. CF26AC02
cod. 006701AB
dis. CF07AA05
cod. 006154AB
dis. CF20CA03
cod. 006724E
Alkoven
SPOT
DECKENLEUCHTE
DOSCHE
WC
SCHRANK
WASCHBECKEN
Waschraum
KÜCHE
Kilchenschrank
Chassis
BETT
PANEL
Hängeschrank
12V
B1
B2

T650 AK-KLC

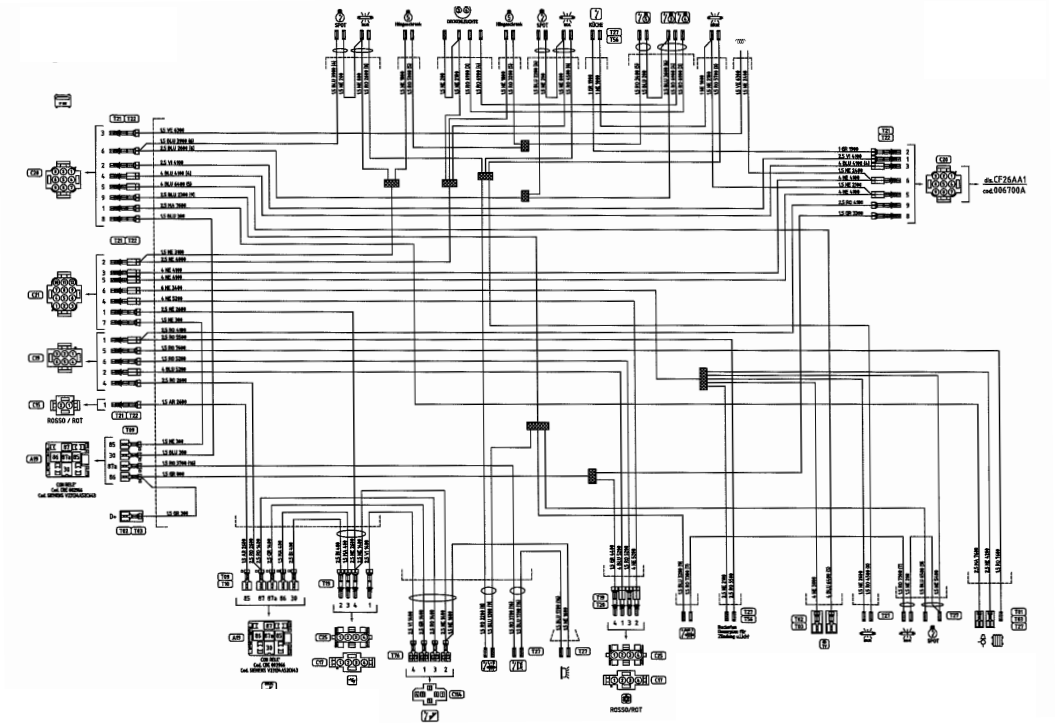

T650 FLC u. AK

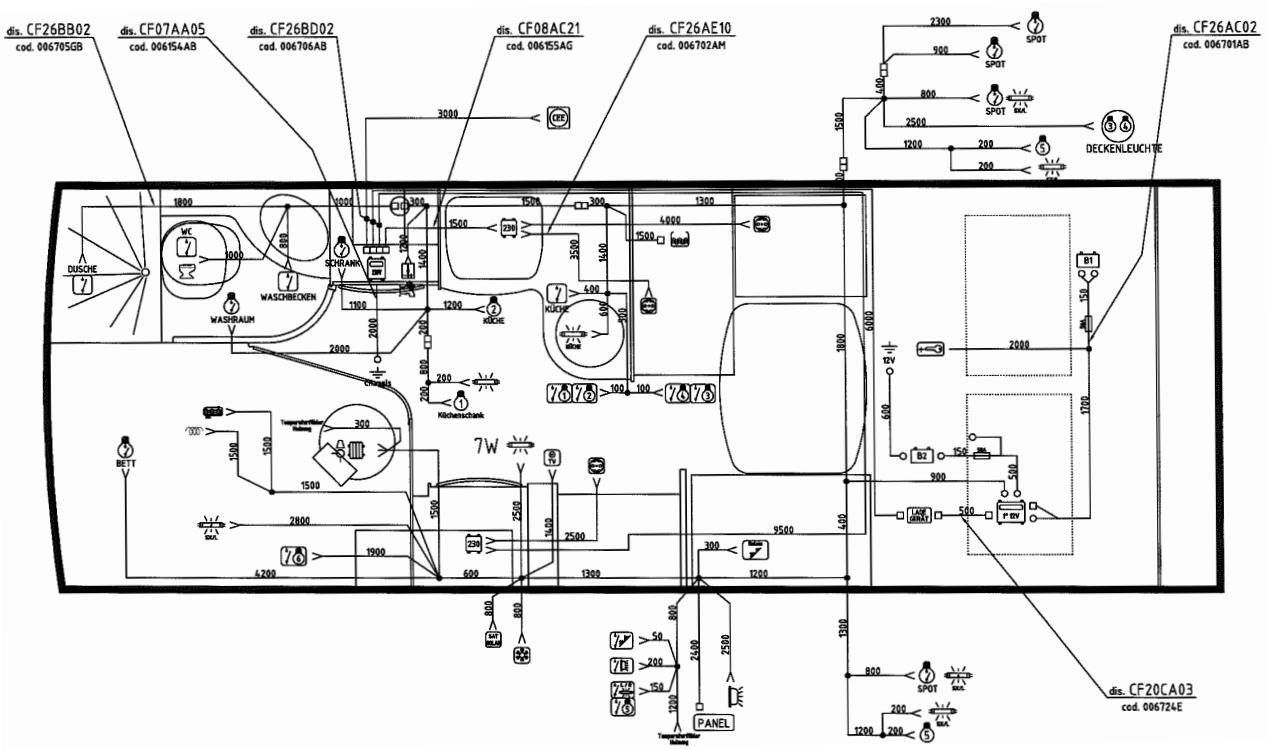
dis. CF26BB02
cod. 006705GB
dis. CF07AA05
cod. 006154AB
dis. CF26BD02
cod. 006706AB
dis. CF08AC21
cod. 006155AG
dis. CF26AE10
cod. 006702AM
dis. CF26AC02
cod. 006701AB
dis. CF20CA03
cod. 006724E
SPOT
DECKENLEUCHTE
DUSCHE
WC
WASCHBECKEN
WASHRAUM
SCHRANK
KÜCHE
Kühlschrank
Küchenschrank
BETT
7W
PANEL
BT
BZ
12V

T650 FLC u. AK

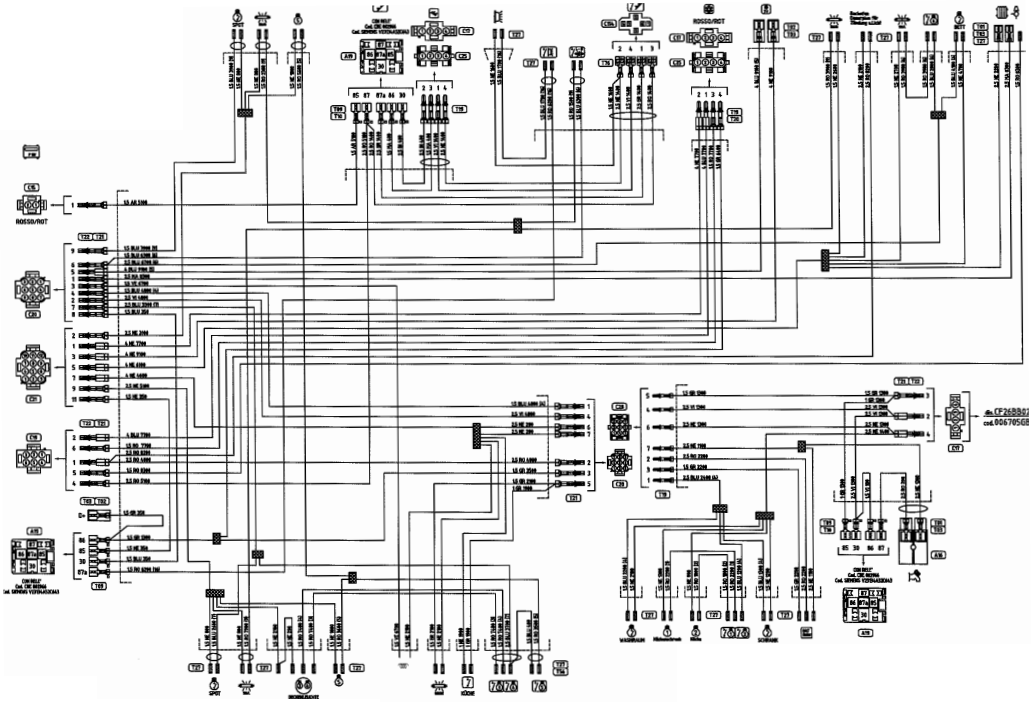

T650 GFLC u. AK

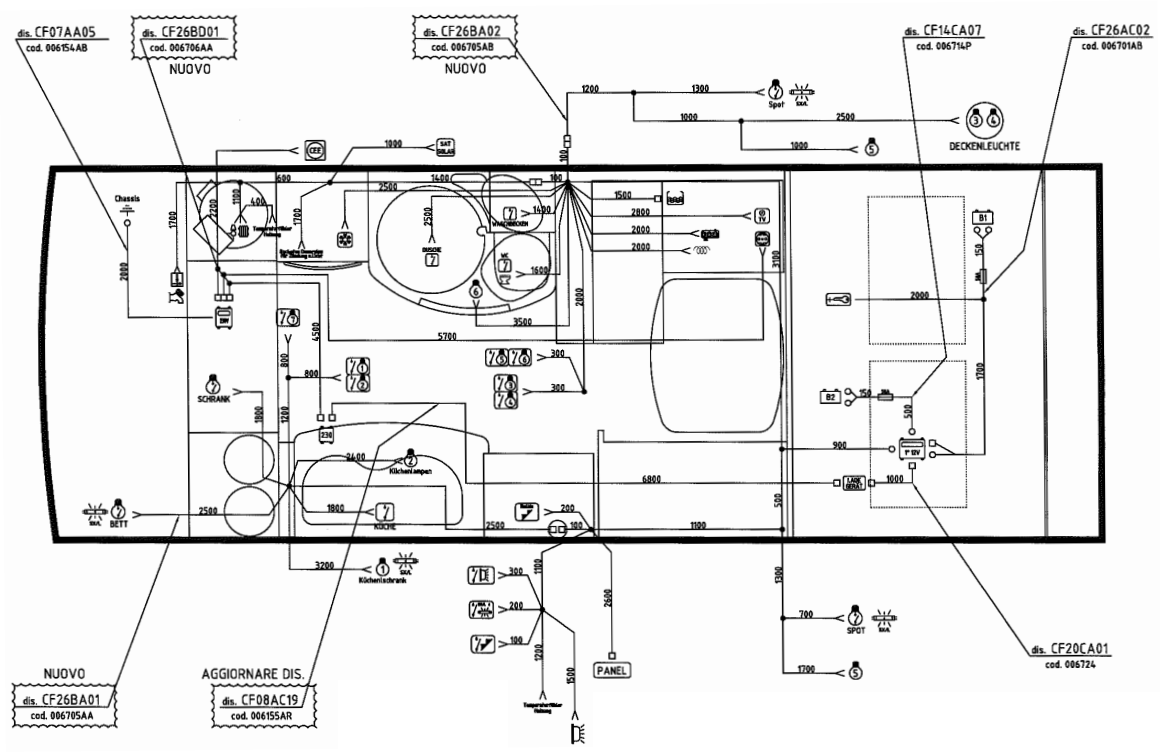

T650 GFLC u. AK

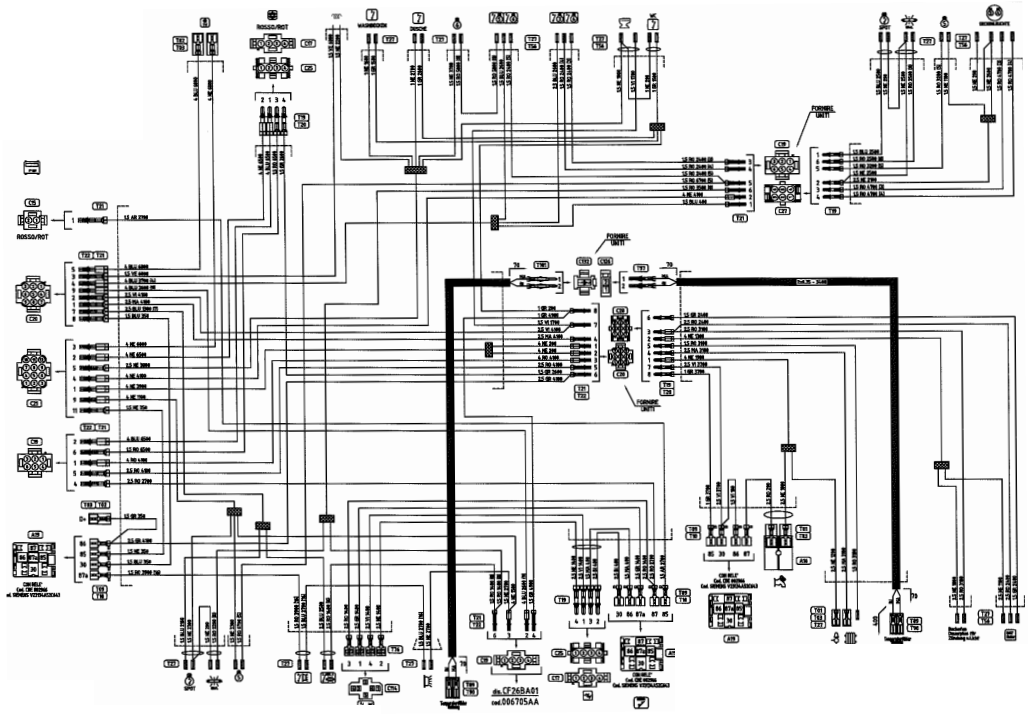

6.8 Subsequently installed devices

Subsequently installed electronic devices that can be used while driving (e.g. mobile phones, wireless equipment, radios, cameras for driving in reverse, navigation equipment, or others) must meet all of the requirements for electromagnetic compatibility. Such equipment must have been approved in accordance with EU Guideline 72/245/EWG as it appears in version 95/54/EG, because otherwise it may cause interference with the electronic systems already installed in the mobile home.

A CE mark is mandatory for devices that have been subsequently installed and which cannot be used while driving.

Chapter 8: Water

8.1 Water supply

Warm water supply
The kitchen and toilet are supplied with fresh water by means of a water pump. The pump is located close to the heating system.

Putting the submerged pump into operation
- Switch on the 12V master switch.
- Switch on the water supply switch, located on the on-board control panel.

> Always ensure that the fresh water tank is filled before switching on the pump. The pump can be destroyed if the tank is dry!

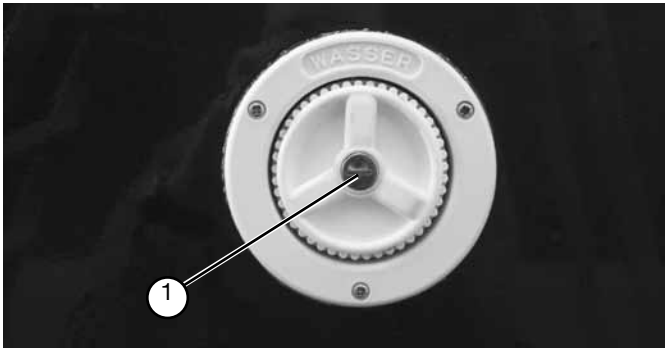

Fresh water tank

To fill with water
- Close all outlets and valves.
- Unlock and open filler neck (1).
- Fill tank with drinking water, preferably using a hose (not included in scope of delivery).

To draw water
- Switch on 12V master switch.
- Turn switches for water pump, heating and boiler to “ON“.
- Turn on “hot“ or “cold“ water taps.

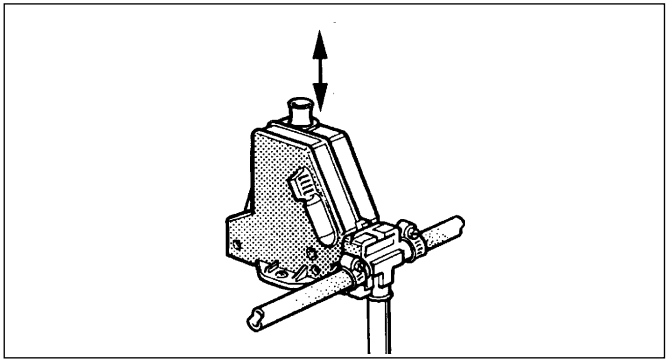

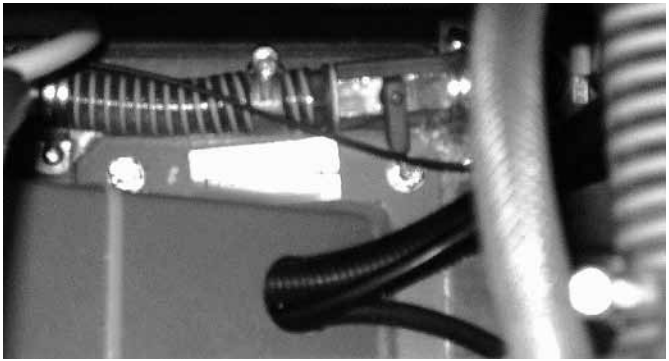

During the cold season or if the main switch is turned on while the heating system is off, the TRUMA safety valve opens, allowing the boiler to empty itself.

Emptying the fresh water tank

- Valves are located next to the fresh water tank in the seating arrangement by the outside wall.

The following applies for obtaining good water from the tank:

- Only fill the tank with drinking water. When filling, pay attention to the sticker with the “Fresh Water“ symbol.
- Always boil water before using it.
- Lock the tank.
- Empty the water tank after every journey and before letting your mobile home stand for a longer period of time.
- Clean the water tank thoroughly with water.

Water in closed containers, such as a tank, quickly becomes full of bacteria. If you enjoy drinking plain water, you should add a disinfectant or store mineral water.

Never allow antifreezer or other chemicals to get into the water circuit. This can be poisonous! When operating in winter, ensure that the fresh water tank is sufficiently heated.

Sewage tank

Emptying the sewage tank

- The support for emptying the sewage tank is located underneath the mobile home. Pull the slide and let the sewage run off at a sewage disposal place.
- After the sewage has run off completely, push the slide back into place.

Only empty your sewage tank in special places for sewage disposal, but never in open spaces! Generally, sewage stations are found in motorway service areas, campsites or petrol stations.

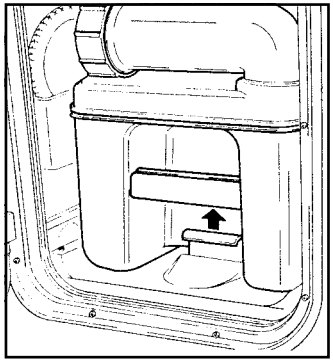

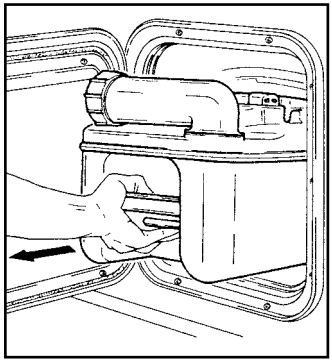

8.2 Flushing toilet

Preparing the toilet

- Open the Thetford door and pull the holding bar up to remove the excrement tank.

> The excrement tank can only be removed when the bolt is closed.

- Pull out the tank as far as possible, keeping it level.
- Slightly tip the excrement tank and then pull it out completely.
- Place it in an upright vertical position.
- Turn the emptying support to an upward position.

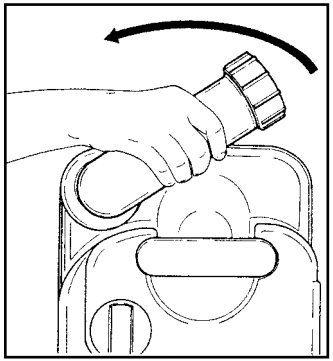

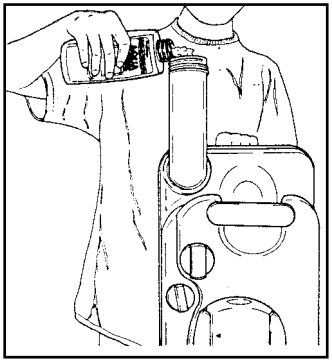

> You may be able to avoid the use of sanitary liquids by installing an activated carbon filter system (sold as an accessory)!

> Use sanitary liquids very sparingly. An overdose is no guarantee of preventing odours!

- Fill the excrement tank with the correct amount of sanitary liquid.
- Then add enough water to completely cover the bottom of the excrement tank.
- Return the emptying support to its original position.

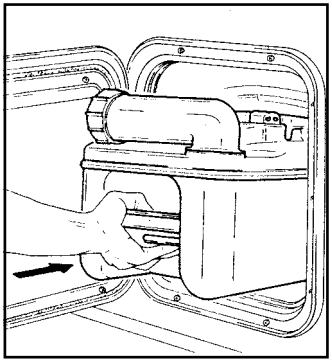

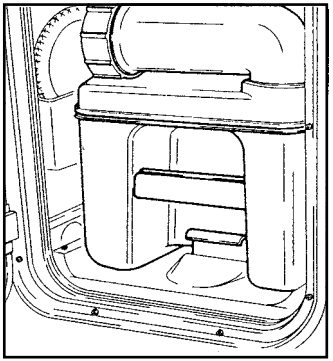

Never fill sanitary liquid directly into the toilet bowl.

- Push the excrement tank back into position.
- Ensure that the holding bar secures the excrement tank.
- Close the service flap.

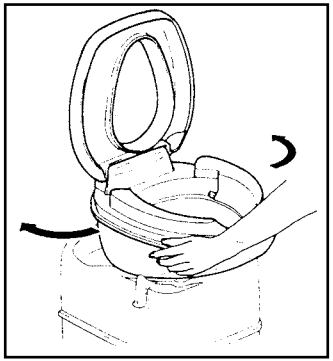

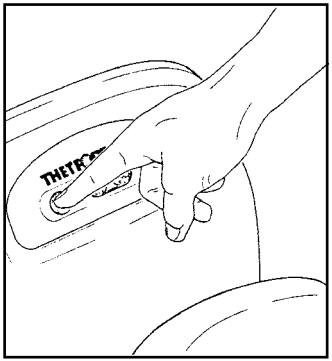

Using the toilet

- Turn the toilet bowl to a comfortable position.
- Use the toilet.
- Fill the toilet bowl with water. Press the flush button. Flushing will continue for as long as you press the button.

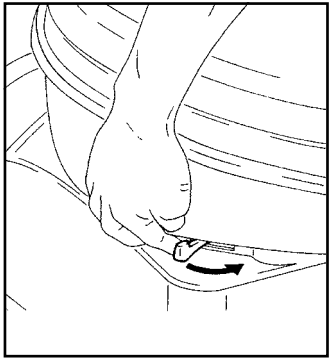

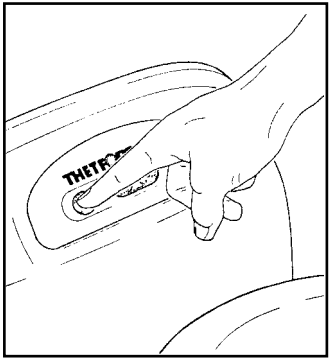

C200 S Cassette

- Open the bolt by turning the bolt lever counter-clockwise.
- Flush the toilet by pressing the flush button.
- After flushing, close the bolt.

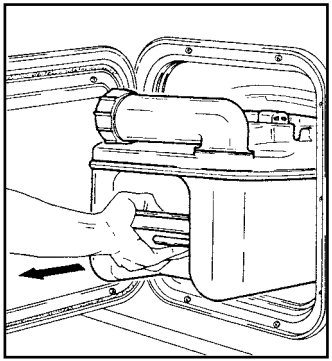

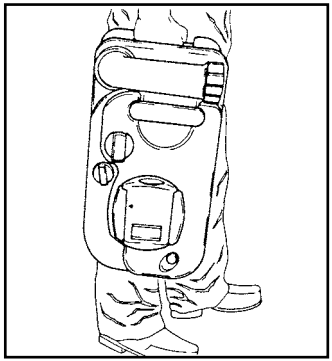

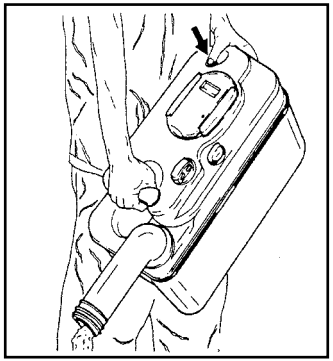

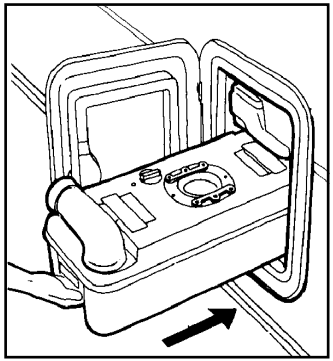

Emptying the cassette

- Open the Thetford door and pull the holding bar up to remove the excrement tank.

> The excrement tank can only be removed when the bolt is closed.

- Pull out the tank as far as possible, keeping it level.
- Slightly tip the tank and then pull it out completely.

> Empty the excrement tank in special places for sanitary disposal, but never in open spaces!

- Take the excrement tank to a sanitary disposal place, making sure to hold the emptying support in an upright position.
- Remove the cap on the emptying support.
- Place the emptying support on the excrement tank in a downward position.
- Press the aerating button with your thumb. The excrement tank will empty itself.
- Return the excrement tank to its storage position, pushing it in until the holding bar locks it into place.
- Lock the service flap.

The following applies for an environmentally-friendly use of the toilet:

- Fill the tank only with toilet solutions that have been approved and do not pollute the environment!
- Empty the toilet only into the appropriate outlets or at service stations!
- Never empty sewage into a drain! Drain channels generally bypass clarification plants and end directly in a river.

8.3 Hot water supply

Water heater

Your mobile home is equipped with a liquid gas heating system with an integrated boiler. The boiler holds 14 liters of water. The operating device for the water heater is integrated in the panel for the heating system.

The following applies for the water heater:

- Empty the water if there is danger of frost!
- If the water heater has been unused for a longer period of time, rinse it out (open the mixing tap)!

⚠ Only allow experts to carry out repairs!

⚠ Any changes to the boiler lead to breakdowns and the type approval for the device will be terminated!

Filling the water heater (initial operation or after emptying)

- Turn on the water pump by turning on the switch for the electric circuit for the water pump, located on the display and operating panel.
- Open all of the hot water taps.
- Only shut the taps when the boiler is full, the displaced air has escaped and water is flowing from the hot water taps.

☞ For further information, please refer to the TRUMA operating manual.

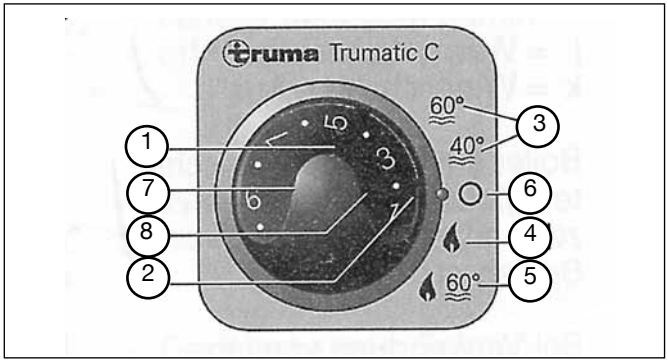

Operating in summer - hot water only

- Turn the rotary switch (6) to summer operation (3), 40°C or 60°C.
- After the set water temperature (40°C or 60°C) has been reached, the burner turns itself off and the yellow control light (7) turns off.

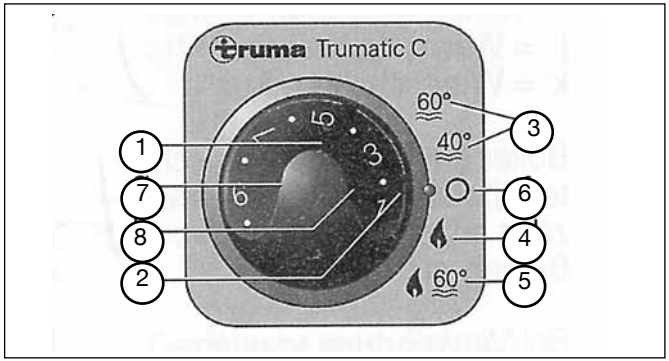

Operating in winter - heating <u>without</u> a demand for hot water

- Turn the rotary switch (1) to the desired setting on the thermostat (1-9). After being switched on, the green control light (2) turns on and shows the room temperature that has been set.
- Turn the rotary switch to the operating position (4).

The device will automatically select the required level of performance depending on the difference in temperature between the set temperature and the temperature at present in the room. After reaching the temperature set on the operating device, the burner shifts down to the lowest level and heats the water to 60° C. the yellow control light (7) shows the heating phase, turning off when the temperature has been reached.

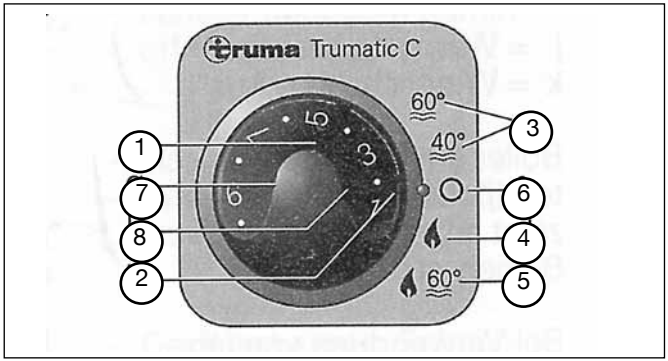

Operating in winter - heating <u>with</u> a demand for hot water

- Turn the rotary switch (1) to the desired setting on the thermostat (1-9). After being switched on, the green control light (2) turns on and shows the room temperature that has been set.
- Turn the rotary switch to the operating position (5).

The device will automatically select the required level of performance depending on the difference in temperature between the set temperature and the temperature at present in the room. After reaching the temperature set on the operating device, the heating turns itself off (irrespective of the water temperature).

The water is automatically heated if the boiler has been filled.

The water temperature then depends on the heating capacity that has been set and the time required to heat the room until the set temperature has been reached.

In this operating position, the yellow control light (6) only lights up if the water temperature drops below 5° C.

It is always possible to operate the heating system, either with or without water.

Turning off "Gas Operation"

- Use the rotary switch (6) to turn off the heating.

The water must be emptied if there is danger of frost!

If the device has not been used for a longer period of time, close the quick-action stop valve in the gas supply line and the gas bottle.

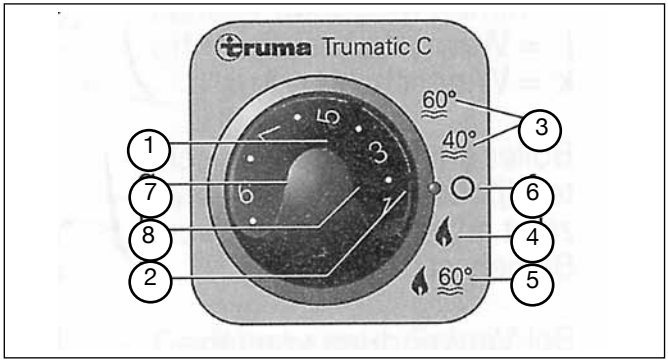

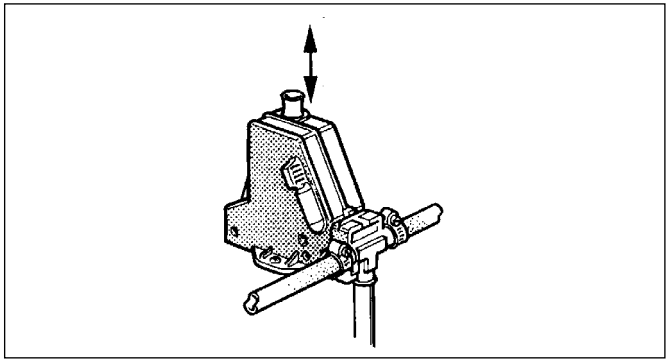

Malfunction

- In case of malfunction, the red control light (8) lights up.
- For possible causes, please refer to the TRUMA Operating Manual for instructions on finding defects.
- To unlock, turn off and then on again.

Emptying the boiler

- Turn off the water pump by turning off the switch for the electric circuit for the water pump, located on the display and operating panel.
- Open all the hot water taps.
- Press the control button (6) on the electrical safety/drain valve. The contents of the boiler are now directly emptied outside.

⚠ If the heating is not on, the safety/drain valve can only be closed when the temperature is above 8° C.

☞ If the temperature of the safety/drain valve is lower than 2° C, the contents of the boiler can drain off when the device is turned off.

Chapter 9: Gas

9.1 General safety rules for the use of LPG fittings

Checking the gas fittings

- Before initial operation, have the LPG fittings checked by an expert.
- The gas fittings must be checked every 2 years by an LPG expert. This must be confirmed on the certificate (conform with Form G 607 from the German Association of Gas and Water Experts).
- The regulator and waste gas pipes must also be checked.
- We recommend that you replace the safety regulator at least every 6 years.
- The connecting hose should also be checked regularly for damage. Replace it immediately if you find tears, porous spots or similar damage.
- The operator is responsible for having checks carried out.

⚠

If you suspect that gas is leaking, take the following measures immediately:

- Shut the stop valve on the gas bottle.
- Ignition sources such as open fire or smoking are strictly forbidden.

⚠

- Air the rooms.
- Clear the danger zone.
- Inform your surroundings (groundsman) and, if necessary, the fire department.

  The gas fittings may only be taken into operation again after they have been checked by an expert.

Built-in objects and changes

- Only an expert may build in objects and make any changes to the gas fittings.
- Devices with different connecting screws may not be operated.

Storing objects

- Gas bottles must always stand upright.
- Cupboards for gas bottles must be sealed up from the living quarters.
- Cupboards for gas bottles must have a vent of at least 100 cm^2 in or directly above the floor.

Regulators and valves

- Pressure governors must have a fixed pressure of 30 mbar. The regulations in EN 12864, Appendix D, apply accordingly. The pressure governors must have a minimum flow rate of 1.2hx/h.
- Carefully attach the high-pressure hose on the bottle by hand **(note: left-handed thread)**. Do not use spanners, pincers or similar tools.
- If the temperature is below 5 °C, use the de-frosting facility (ice-ex) for regulators.

The operating pressure for gas is 30 mbar.

Operating the cooker

- When operating the cooker, the skylight or the window must be open.
- The operating levers of gas devices that must be pressed to ignite when turned on, must spring back by themselves after being pressed.

Cookers or other devices that use air from indoors for combustion may never be used to heat the vehicle. If this is ignored it could cause mortal danger, due to the lack of oxygen and the possible development of odorless carbon monoxide.

Waste gas

- The waste gas pipe must be attached firmly and impenetrably to the heating and the chimney. It may not be damaged in any way.
- Waste gas must be passed out without obstruction and fresh air must be passed in without obstruction. For this reason, there may be no snow walls or skirts directly next to the vehicle. The intake openings on the underbody of the vehicle must be kept clear and clean.

Before initial operation

- Keep all vents clear.
- Remove any snow from chimney.
- Clear aspirating holes for combustion air underneath the vehicle of dirt and/or snow. Otherwise, the waste air might have a CO content that is higher than allowed.
- The safety vents must not be closed.
- Never use portable cookers or heating devices, except electric heating devices, but not radiant heaters, because they can cause a fire or suffocation.

Read the manufacturers‘ operating manuals thoroughly and carefully!

9.2 Gas supply

Your mobile home has been equipped with a propane system (gas bottle not included in scope of delivery). The following equipment runs on this system:

- cooker,
- refrigerator,
- water heater,
- oven
- and possibly, special equipment.

Gas container

is located in the rear storage compartment
or separately in the side wall, depending on the model.

Gas bottle container

The gas bottle container holds 2 x 11 kg propane cylinders. These are connected to the gas pressure governor mounted on the wall by means of high-pressure hoses with integrated security against breaking. It is fitted out with a gas flow monitor and an integrated test connection. Therefore, heating may explicitly be operated while driving. The cyclinders are secured using two independent lashes.

The following applies for the gas bottle box:

- Always control the fastenings before driving.
- Securely lash any loose straps.
- The maximum pressure in the hose of the safety regulator may not be more than 30 mbar.

The gas bottle room may not be used as additional storage room. Danger! Fire!

Stop valves and valves in the kitchen drawer

These valves are use to interrupt the flow of gas to the corresponding device. Each of the valves is identified by a sticker.

The following applies for stop valves and valves:

- All of the taps on gas devices must be shut while driving. The only exception is for the taps for heating devices that are to be used while driving.

Over the years, vibrations can cause slight leakages to appear. If you suspect that there are leakages, have your dealer or an authorised workshop for gas facilities check your system.

Leak tests may never be carried out near an open flame.

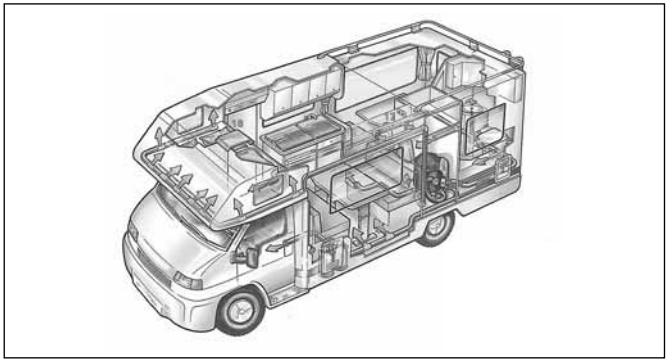

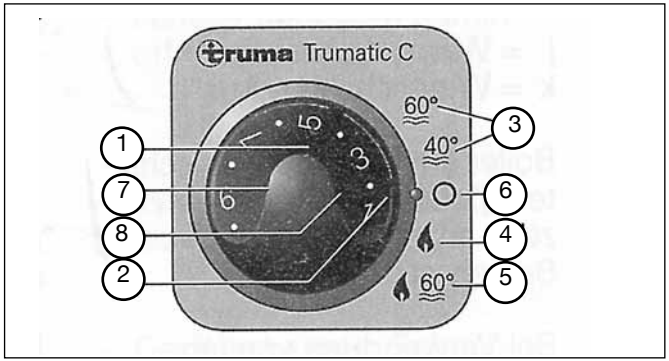

9.3 Heating

Location of the operating device

- In the kitchen or by the middle seating arrangement, depending on the model.

To operate

- Remove the chimney cap (not in scope of delivery).
- Open the bottle valve and the quick-action stop valve in the gas pipe.
- Use the rotary switch to adjust the room temperature. The equipment is now operating. The green control light “Operation“ under the rotary switch is shining.

The device will automatically select the required level of performance for the burner, depending on the difference in temperature between the set temperature and the temperature at present in the room.

The LPG heating system in your mobile home has been designed to permit operation while driving. The requirements of the EU Guideline 2001/56/EG for heating devices have been fulfilled so that, in case of an accident, LPG cannot escape involuntarily.

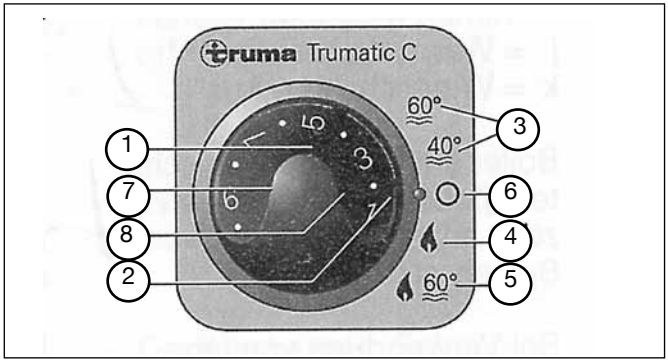

Turning off "Gas operation"

- Use the rotary switch (6) to turn off the heating.

The water must be drained off if there is danger of frost!

If you do not plan on using the equipment for a longer period of time, close the quick-action stop valve in the gas pipe and the gas bottle.

Malfunction

- In case of malfunction, the red control light (8) lights up.
- For possible causes, please refer to the TRUMA Operating Manual for instructions on finding defects.
- To unlock, turn off and then on again.

For further information, please refer to the TRUMA operating manual.

9.4 Refrigerator

Modes of operation

Three modes of operation are possible for the refrigerator.

- 12 V operation: electricity is supplied by the mobile home‘s battery.
- 230 V operation: electricity is supplied from an external source.
- LPG: supplied by the gas bottles in the mobile home.

Refrigerators manufactured by Dometic or Thetford can be used.

> Before initial operation, please refer to the manufacturer‘s operating instructions.

12 V operation

12 V operation should only be used while driving, when the motor is running. When resting or if you have stopped for a longer period of time, turn off the 12 V operation; otherwise, the mobile home‘s battery will quickly discharge.

> Do not run the refrigerator on gas while driving. Danger of explosion!

9.5 Gas cooker

The kitchen in the mobile home has been equipped with a gas cooker with 3 burners.

Before initial operation

- Open the bottle valve and the quick-action stop valve in the gas pipe.

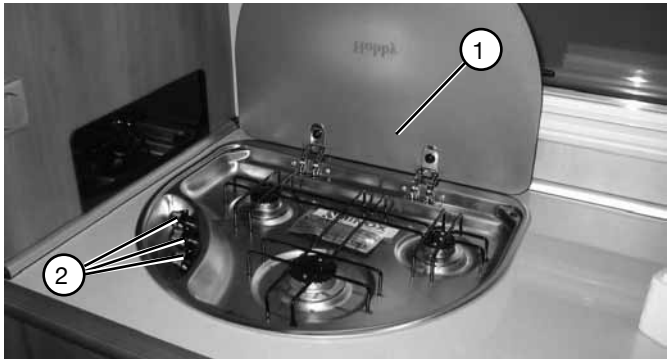

Operation

- Open the tinted glass covering (1).
- Turn the rotary switch (2) of the burner you wish to use to the ignition position (large flame) and press.
- Ignite the burner with a gas lighter or match or cigarette lighter.
- Continue to press the rotary switch for a further 5-10 seconds to ensure that the automatic flame guard takes effect.
- Release rotary switch (2) and turn to the desired setting (large or small flame).
- If ignition was unsuccessful, repeat the procedure.
- To turn off the gas flame, turn the rotary switch back to the “0“ setting.
- Close the main cock on the gas cooker.

Use cooking gloves or potholders when handling hot pots, pans and similar objects. You may be burned!

After cooking, leave the glass covering open until the burner no longer emits heat. Otherwise, the glass plate could burst.

Never store easily inflammable objects such as dishtowels, serviettes, etc., near the cooker. Danger of fire!

Chapter 10: Accessories

Only the most important accessories are described in this chapter.
Please note the manufacturers‘ detailed operating instructions, installation instructions and circuit diagrams for the accessories.

10.1 Towbar coupling

The following applies for the towbar coupling:

- If a towbar coupling has been subsequently mounted, it must be entered in the vehicle's documents by the Technical Surveyance Association (TÜV). The necessary documents are enclosed with the towbar coupling.
- Note the permitted load for the rear axle.
- Note the permitted braked trailing load (see Technical Data). (No extra load possible.)
- Permitted drawbar load: 75 kg (for models with front-wheel drive) or 80 kg (for models with rear-wheel drive).

Entry in the vehicle's documents

- Have your HOBBY dealer mount external constructions. He will also handle all the formalities for you.
- If this is not the case, drive your mobil home together with the registration documents and the necessary expertise for the external construction to the TÜV, where the external construction will be inspected and a corresponding expertise issued for registration in the vehicle's documents.
- Present the expertise to the Driver and Vehicle Licensing Agency, where the amendments will be entered in the vehicle documents.

In addition, note the manufacturer‘s operating instructions.

Mounting or subsequent mounting of hitches are not permitted for models T 600 GFLC, T 600 GRS and T 600 AK GFLC.

Chapter 11: Maintenance and Care

11.1 Maintenance

Maintenance intervals

There are stipulated maintenance intervals for the mobile home and its equipment.

Also note the maintenance intervals for the basic Ford vehicle.

The following applies for maintenance intervals:

- Have the first maintenance carried out by a HOBBY dealer 12 months after the vehicle was first registered.
- All further maintenance should be carried out once a year by a HOBBY dealer.
- The maintenance of the basic vehicle as well as all built-in equipment should be carried out at the intervals given in each operating manual.

The gas fittings must be checked every 2 years by an expert for liquid gas and confirmed on the certificate in accordance with DGVW G 607.

The operator of the vehicle is responsible for having maintenance carried out on schedule.

Replace the safety regulator for gas at least every 6 years!

For safety reasons, spare parts for equipment must conform with the manufacturer‘s instructions and must be installed by him or a duly authorised representative.

11.2 Airing

For a comfortable climate inside the caravan, there must be sufficient ventilation. This also avoids corrosive damage due to condensation.

Condensation is caused by

- insufficient volume inside the caravan
- breathing and perspiration of the passengers
- bringing in damp clothing
- operating a gas cooker

Ensure that there is a sufficient exchange of air to avoid damages due to the build-up of condensation!

11.3 Care

Cleaning the exterior

The vehicle should not be washed more often than necessary.

Wash the vehicle only in places provided for this purpose.

Using cleaning materials sparingly. Aggressive cleansers, such as wheel rim cleaners, damage the environment.

The following applies when cleaning the exterior:

- Rinse the vehicle with a weak jet of water.
- Wash the vehicle with a soft sponge and a commercial shampoo solution. Rinse the sponge often.
- Then rinse with a generous amount of water.
- Dry the vehicle with a suede cloth.
- After washing the vehicle, leave it standing outside to dry off completely.

Dry the headlights and sockets thoroughly, as water collects there easily.

The following applies when waxing the surfaces:

- The varnished surfaces should be treated occasionally with wax. Note the application instructions given by the wax manufacturers. We recommend products made by VALMA, turtle, Flash or System.

The following applies when polishing the surfaces:

- In exceptional cases, use polish to refinish weathered varnished surfaces. We recommend solvent-free polishing paste.

Use polish only in special cases and as seldom as possible, because polish removes the top layer of varnish. Frequent polishing causes extreme wear.

The following applies for tar and resin stains:

- Tar and resin stains as well as other organic stains can be removed with petroleum ether or spirits.

Do not use aggressive solutions such as products containing ester or ketone.

The following applies for damages:

- Repair damages immediately to avoid further damages due to corrosion. Ask your HOBBY dealer for assistance.

Windows and doors

The following applies for their care:

- Rub the rubber joints around doors and windows lightly with talcum powder.
- Clean acrylic glass panes only with a clean, wet sponge and a soft cloth. Cleaning with a dry cloth may scratch the panes.

Do not use strong and aggressive solutions that contain softeners or solvents!

You will find talcum powder in auto accessory shops.

Cleaning the interior

The following applies for cushions, upholstery and curtains:

- Clean cushions with a soft brush or hoover.
- Have very dirty upholstery and curtains dry-cleaned. Do not wash them yourself!
- If necessary, wash them carefully using the foam from mild-action detergent.

The following applies for carpeted floors:

- Clean with a hoover or brush.
- If necessary, treat with carpet shampoo or a shampooing machine.

The following applies for furniture surfaces:

- Clean the surface of wooden furniture with a damp cloth or sponge.
- Rub dry with a dust-free cloth.
- Use mild furniture polish.

Never use strong-action cleansers or intenvise furniture polish, because this could scratch the surface!

The following applies for the toilet:

- Clean with a neutral liquid cleanser and a cloth that does not scratch.

Never use strong-action cleansers in the toilet!

Accessories

The following applies for their care:

- Clean plastic parts (e.g. fenders, skirts) with water of up to 60° C and mild household cleansers.
- Clean greasy or oily surfaces with spirits.
- If necessary, lubricate door hinges and leveling supports.
- Clean fresh water pipes, the fresh water and sewage tanks once a year.

Do not use strong-action cleansers, because these could scratch the surface!

Remove all spray cans containing cleansing and care solutions from the vehicle after you have finished! Otherwise they may explode if the temperature exceeds 50° C!

11.4 Operating in winter

Preparations

The following applies for preparations:

- Check vehicle for damage to varnish or rust. If necessary, repair damage.
- Ensure that water cannot get into the compulsory ventilation in the floor or the heating.
- Protect the metal parts of the underbody against rust with a wax preservative.
- Use a suitable material to preserve the exterior varnished surfaces.

Operating in winter

During operation in winter, condensation is caused when using the vehicle in low temperatures. Sufficient ventilation is extremely important to ensure that the quality of the air inside the vehicle is good and to avoid damages to the vehicle caused by condensation.

The following applies for ventilation:

- When heating the vehicle, turn up the heating to the highest position and open the cupboards in the ceiling, curtains as well as blinds. This ensures optimal ventilation.
- Only turn on the heating when the circulation fan is on.
- Air all cushions in the morning; air the storage compartments and dry damp spots.

If, despite this, condensation should build up somewhere, simply wipe it away.

Frost protection

If the interior is sufficiently heated, the fresh water tank, water pipes and water heater should not freeze.

The following applies for the sewage tank:

- In very low temperatures, add antifreezer or common salt to the sewage.
- Store sewage outside the vehicle.
- Leave the drain cock of the sewage tank open.

At the end of the winter season

The following applies for the care of the vehicle:

- Thoroughly wash the underbody and the motor. This removes corrosive thawing agents (salts, alkali).

Wash the vehicle only in places provided for this purpose.

Using cleaning materials sparingly. Aggressive cleansers, such as wheel rim cleaners, damage the environment.

Winterizing your vehicle

In general:

- Only leave your mobile home in a closed space if it is dry and easy to air. Otherwise, it is better to leave your mobile home in the open.

The following applies for the interior fittings:

- Empty the refrigerator and clean it. Leave the refrigerator door open.

- Leave storage compartments and cupboards open to air.
- Place cushions and mattresses in such a way that they will not come into contact with condensation.
- If necessary, heat the mobile home to avoid mildew due to condensation.
- Place 3 kg of common salt in a bowl to keep the interior of the vehicle dry. The salt will soak up any moisture. Change it regularly.
- Disconnect batteries; ideally, remove them and check once a month if they are still charged, otherwise charge them.
- Turn off the 12 V master switch.

The following applies for the exterior of the caravan and the basic vehicle:

- Use a suitable material to preserve exterior varnished surfaces.
- Protect the metal parts of the underbody against rust with a wax preservative.
- To care for the wheels, jack up the vehicle or move it from one spot to another every two months.
- Use a tarpaulin, leaving space between it and the vehicle to ensure sufficient airing.
- Leave the compulsory ventilation open.
- Air your mobile home thoroughly every three to four weeks.
- Check the antifreezer in the cooling circuit, refilling if necessary.

The following applies for containers:

- Empty the fresh water tank with a pump or waste valve and clean it.
- Empty and clean the sewage tank.
- Empty and clean the WC tank.
- Completely empty the water heater by switching the fresh water pump on the on-board control centre to “off“ and opening all faucets.
- Ensure that water cannot get into the compulsory ventilation in the floor or the heating.

Also note the information and operating instructions given by the manufacturers of the built-in equipment.

Chapter 12: Sanitation and Environmental Protection

12.1 The environment and traveling

Environmentally fair use

It is only natural that owners of mobile homes and caravans have a special responsibility for the environment. Always use your vehicle in an environmentally friendly way.

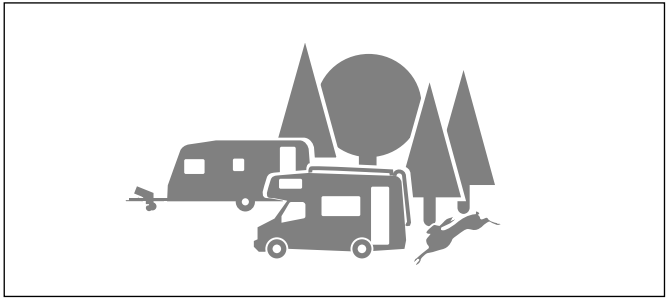

The following applies for environmentally fair use:

- Do not spoil the peace and cleanliness of nature.
- Dispose of sewage, excrements and wast in the proper way.
- Set an example so that mobile home and caravan drivers are not generally held to be pollutionists.

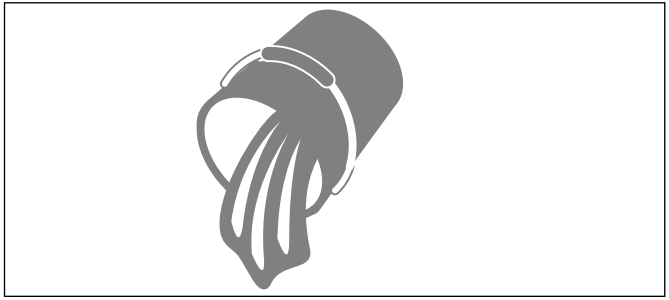

The following applies for sewage:

- Collect sewage on board only in built-in sewage tanks or, if necessary, in suitable containers!
- Never empty sewage in open spaces or down manholes! Generally, the public sewage system does not run through clarification plants.
- Empty your sewage tank as often as possible, even if it is not completely full (hygiene). If possible, rinse out the sewage tank with fresh water after emptying.

Only empty your sewage tank in special places for sewage disposal, but never in open spaces! Generally, sewage stations are found in motorway service areas, campsites or petrol stations.

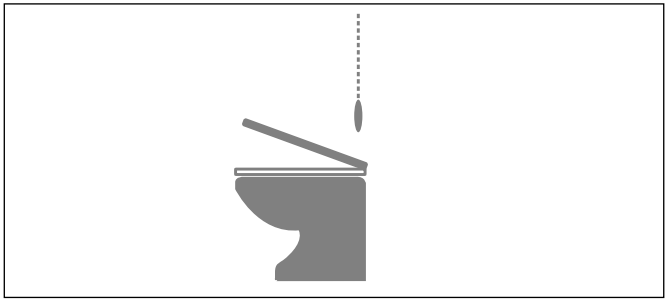

The following applies for excrements:

- Only use approved sanitary cleansing products in the excrement tank.

You may be able to avoid the use of sanitary liquids by installing an activated carbon filter system (sold as an accessory)!

Use sanitary liquids very sparingly. An overdose is no guarantee of preventing odours!

Sanitation

- Never allow the excrement tank to become too full. Empty the tank immediately as soon as the level indicator lights up.
- Never empty excrements down manholes! Generally, the public sewage system does not run through clarification plants.

Empty the excrement tank in special places for sanitary disposal, but never in open spaces!

The following applies for waste:

- Separate your waste and put appropriate materials in the recycling bins.
- Empty waste bins as often as possible in the appropriate bins or containers. This avoids unpleasant and problematic waste from building up on board.

The following applies for picnic spots:

- Always leave picnic spots clean and tidy, even if you dispose of someone else‘s waste.

Careful use of the environment is not only in the interest of nature, but also of mobile home and caravan drivers everywhere!

12.2 Returning the vehicle

If you should ever have to give up your mobile home and have it recycled, the manufacturer of the basic vehicle is responsible for taking it back (status at the time of printing).

This means that your HOBBY mobile home will be taken back free of charge by any Ford dealer and expertly recycled.

Chapter 13: Technical Data

13.1 Weights according to 92/21/EWG, 2007 season

Model	Series	Weight of basic vehicle	Driver	Diesel (kg)	Basic equipment	Mass when vehicle is ready to start	Techn. perm. overall weight	Overload weight	No. of seats
T 555 FS	Siesta (C)	2560	75	68	116	2819	3500	681	4
T 600 FC	Siesta (C)	2625	75	68	121	2889	3500	611	4
T 600 GFLC	Siesta (C)	2720	75	68	121	2984	3500	516	4
T 600 GFS	Siesta (C)	2710	75	68	121	2974	3500	526	4
T 650 FLC	Siesta (D)	2835	75	68	121	3099	3500	751	4
T 650 FLC	Siesta (D)	2835	75	68	40	3018	3500	482	4
T 650 GFLC	Siesta (D)	2870	75	68	121	3134	3500	716	4
T 650 GFLC	Siesta (D)	2870	75	68	40	3053	3500	447	4
T 555 AK LC	Siesta (C)	2687	75	68	121	2951	3500	549	4
T 555 AK FS	Siesta (C)	2645	75	68	116	2904	3500	596	4
T 600 AK GFLC	Siesta (C)	2790	75	68	121	3054	3500	446	4
T 650 AK FLC	Siesta (D)	2885	75	68	121	3149	3500	701	4
T 650 AK FLC	Siesta (D)	2885	75	68	40	3068	3500	432	4
T 650 AK GFLC	Siesta (D)	2899	75	68	121	3163	3500	687	4
T 650 AK GFLC	Siesta (D)	2899	75	68	40	3082	3500	418	4
T 650 AK KLC	Siesta (D)	2872	75	68	121	3136	3500	714	4
T 650 AK KLC	Siesta (D)	2872	75	68	40	3055	3500	445	4

These figures refer to the standard vehicle without extra equipment. Deviations of up to 5 % are possible.

Model	Conventio-nal loading	Overload weight	Length of vehi-cle	Personal equipment	Remaining overload weight
T 555 FS	225	456	5,8	98	358
T 600 FC	150	461	6,4	94	367
T 600 GFLC	225	291	6,4	104	187
T 600 GFS	225	301	6,4	104	197
T 650 FLC	225	526	7,1	111	415
T 650 FLC	225	257	7,1	111	146
T 650 GFLC	225	491	7,1	111	380
T 650 GFLC	225	222	7,1	111	111
T 555 AK LC	225	324	5,8	98	226
T 555 AK FS	225	371	5,8	98	273
T 600 AK GFLC	225	221	6,4	104	117
T 650 AK FLC	225	476	7,1	111	365
T 650 AK FLC	225	207	7,1	111	96
T 650 AK GFLC	225	462	7,1	111	351
T 650 AK GFLC	225	193	7,1	111	82
T 650 AK KLC	225	489	7,1	111	378
T 650 AK KLC	225	220	7,1	111	109

13.2 Inflation pressures

Tires	tire pressure (bar)	Basis
Michelin XC Camping		
215/75 R 16 C	front: 3.5 rear: 5.5	FORD
other tire manufacturers*		
185/75 R 16 C	front: 4.7 rear: 3.5	FORD
215/75 R 16 C	front: 3.5 rear: 4.75	FORD

* These inflation pressures are only valid for standard tires by alternative manufacturers. In principle, we try to equip all vehicles with “Michelin Camping“ tires. In times of high demand, however, Michelin is unable to fulfil all demands. In this case, alternative brands are mounted, e.g. Pirelli.

Index

A
Accessories
care of 11-4
Airing 11-1

B
Battery charger
location 06-5
Beds, rearranging
lift-off table construction 07-12
Brakes 02-5, 04-5
Breakdown of devices 06-8

C
Caravan battery 06-6
changing the battery 06-7
features 06-6
location 06-6
Care 11-2
of windows and doors 11-3
of furniture surfaces 11-3
of cushions and upholstery, curtains 11-3
of carpeted floor 11-3
of toilet 11-3
of accessories 11-4
Changing a tire 04-5
Charging procedure 06-5
with running motor 06-5
protecting the device 06-5
protection against total discharge 06-4
Chassis 03-1
Checking the gas supply 9-1
Circuit diagram
interior 06-11
Compulsory ventilation 05-3
Condensation 11-1
Cupboard doors
with push-button knob 07-1

D
Day and night position
overview 07-15
Display elements 06-2
Doors and flaps
interior 07-1
Doors
opening and closing 05-5
Driving 02-5
curves 02-6
protecting your tires 04-1
in reverse 02-6
Driving in reverse 02-6
Driving through curves 02-6

E
Economic driving 02-6
Electric power supply 06-3
Electric power supply unit 06-4
Electric system
fuses 06-7
Electrical installations
safety instructions 06-1
Emergency equipment 02-7
fire extinguisher 02-8
first-aid kit 02-7
warning triangle 02-8
Entrance door 05-5
Entrance step 03-8
Environment 12-1
waste 12-3
sewage 12-1
sanitation 12-2
excrements 12-2
picnic spots 12-3
Environmental protection 12-1
Exterior gas supply 05-7
Exterior mirror 05-9
Exterior shower
water supply 05-8
cleaning the exterior 11-2
polishing 11-3
waxing 11-2
Exterior socket 05-9
Externally mounted constructions 03-9

F
Fire extinguisher 02-8
First-aid kit 02-7
Flaps
opening and closing 05-5
Flushing toilet 08-4
Fresh water filler neck 05-8
Fresh water tank 08-1
to empty 08-2
to get water 08-1
to fill with water 08-1
Furniture surfaces
care of 11-2
Fuse protection of elec. system
12 V circuits 06-7
information on fuses 06-8
starter battery 06-9

G
Gas 09-1
Gas bottle container 09-3
Gas bottle flap 05-7
Gas cooker 09-7
to operate 09-8
putting into operation 09-8
Gas supply 09-3
General inspection 02-1

H
Halogen lights
to change 06-9
Headrests
adjusting the height 07-19
Heating
to turn off 09-6
to operate 09-5
location of operating device 09-5
malfunction 09-6
Hot water supply
function 08-4

I
Inflation pressure 04-2
Inflation pressure values 13-2

K
Keys to the vehicle 05-5
Knockout windows 07-4

L
Levelling supports 03-10
Light switches 07-2
Lights
  changing halogen lights 06-9
Loading 03-1
Loads
  for maxi chassis 03-3
  for special releases 03-4
LPG fittings
  waste gas 09-2
  quick-action stop valves and valves 09-4
  location 09-4
  built-in objects and changes 09-1
  checking 09-1
  regulators and valves 09-2
Luggage trunk flap 05-6

M
Mains supply 06-3
Maintenance intervals 11-1
Maintenance
  brake system 04-5
Maximum speed 02-9
Maximum speeds 02-9
Media unit 07-22

O
On-board control panel 06-1
Operating in winter 11-4
  sewage tank 11-5
  ventilation 11-5
  frost protection 11-5
  preparations 11-4
Operating the cooker 09-2

P
Petrol 02-6
Preparing the vehicle 02-2
Protection against total discharge 06-5

R
Refrigerator 09-7
  230 V operation 09-7
  to operate 09-7
  modes of operation 09-7
  gas operation 09-7
  ventilation 05-3
  locking the door 09-7
  operating in winter 05-3
Registration 02-1
Regulator 09-2
Residual current operating device 06-5
Resin stains 11-2
Roof load 02-4

S
Saving energy 02-6
Seatbelts
  in caravan 07-10
Seating arrangements
  overview 07-14
Seats
  in caravan 07-10
Securing the vehicle 02-12
Selecting a parking space 02-12
Service flaps 05-1
Sewage tank 08-6
  to empty 08-6
Shunting 02-5
Skylights 07-5
  with combined blind 07-5
  combining blinds 07-5
Sunroof
  with combined blind 07-7
Sunshade 07-5
  combined with blinds 07-5
  to adjust 07-6
Switching electric consumption 02-12

T
Tank flaps 05-1
Tar stains 11-3
Technical data sheet 13-1
Toilet flap 05-7
Toilet
care of 11-3
Toilet
use of 08-5
  C 200 E cassette 08-6
  C 200 S cassette 08-6
  emptying cassette 08-7
Towbar coupling 10-1
Tread depth 04-2
Tires 04-1

V
Valves 09-2

W
Warning triangle 02-8
Waste gas 09-2
Water boiler 08-9
  to empty 08-9
  to fill 08-9
  operating in summer 08-10
  malfunction 08-12
Water supply for exterior shower 05-8
Weight of accessories 03-1
Wheel rims 04-3
Winterizing your vehicle 11-5
  exterior of caravan and basic vehicle 11-6
  containers 11-6
  interior fittings 11-5

Calculating masses for HOBBY mobile homes

The following table enables you to calculate the mass of your own mobile home on the basis of the mass data given in this manual. This calculation must always result in a positive remaining load in order to fulfil current legal requirements.

To determine your remaining load, simply subtract the "mass when the vehicle is ready to start", the "conventional load", all "additional equipment" as well as your "personal luggage" from the "technically permissible overall mass". Simply enter the date for your personal mobile home in the table on the next page. If you have any questions or if anything is unclear, your HOBBY dealer will be pleased to assist you.

Your
HOBBY Motor Home Plant
Ing. Harald Striewski GmbH

Model:

Technically permissible overall mass:		
Mass when the vehicle is ready to start (incl. gas, water, electricity, driver and fuel):	-	
Conventional load (no. of seats [excl. driver] x 75 kg:	-	
Additional equipment:		
1.)	-	
2.)	-	
3.)	-	
4.)	-	
5.)	-	
6.)	-	
7.)	-	
8.)	-	
9.)	-	
10.)	-	
11.)	-	
12.)	-	
13.)	-	
14.)	-	
15.)	-	
Personal luggage = (10 x N) + (10 x L):	-	
N - Total number of seats (incl. driver)		
L - Length of vehicle in meters		
Remaining load:		

⚠ Under no circumstances may the technically permissible overall mass of the mobile home be exceeded!